FYV 方圆阀门集团有限公司
FANGYUAN VALVE GROUP CO., LTD.

地址：中国・温州瓯北五星工业区

Add: Wuxing Industrial Zone, Oubei, Wenzhou, China

销售部(SALES DEPT)：0577-67316666 67316669

传真(FAX)：0577-67315262 邮编(P.C)：325105

E-mail: fy@fy6666.com

http://www.fy6666.com

销售办事处

方圆阀门集团有限公司 FANGYUAN VALVE GROUP CO., LTD.

FYV 方圆阀门集团有限公司
FANGYUAN VALVE GROUP CO., LTD.

2016 产品目录

Brief Introduction

企业简介 >>

■方圆阀门集团有限公司，成立于1998年，国内大型阀门制造商之一，经过近20年的发展，已成为一家集工业阀门研发、设计、制造、销售及服务为一体的科技型企业，一直致力于为客户提供全套工业阀门解决方案。方圆阀门总部坐落于中国温州瓯北，从事石油石化、天然气等阀门的研发、生产及销售。公司是行业知名龙头企业，高新技术企业并拥有省级技术研发中心，公司获得县长质量奖、浙江省著名商标、浙江省名牌产品、浙江省信用管理示范企业、浙江省标准化创新企业、AAA级守合同重信用单位、永嘉县纳税大户、功勋企业等荣誉称号。

■专业生产平板闸阀、PE钢闸阀、平行双闸板闸阀、球阀、控制闸阀、控制球阀、闸阀、截止阀、止回阀、蝶阀、节流截止放空阀、阀套式排污阀、双作用节流截止阀、高压注水阀、锻钢阀等产品。在研发、设计、专利技术方面都达到国际先进技术水平和国内领先水平，已获得多项专利，PE钢闸阀、防垢平板闸阀等部分产品已替代进口产品，并获得了TS、ISO9001、ISO14001、OHSAS18001、API6D、API 600、API 602、CE、API 6FA、API 607、CCF等国内国际体系及产品认证。全国阀门标准化技术委员会成员单位，参与起草了JB/T5298-2016《管线用钢制平板闸阀》、GB/T20173-2013《石油、天然气工业管道输送系统-管道阀门》、GB/T19672-2005《管线阀门 技术条件》、JB/T8691-2013《无阀盖刀形闸阀》、JB/T12006-2014《钢管焊接球阀》等国家标准和行业标准，并负责起草了GB/T26145-2010《排污阀》国家标准。中石油甲级供应商，中石化一级供应商、中海油一级供应商、神华一级供应商、港华燃气优秀供应商、中国燃气优秀供应商、华润燃气入围供应商，产品广泛应用于中石油、中石化、中海油、中化、港口、码头、神华、港华燃气、中国燃气、华润燃气、新奥燃气、昆仑燃气、城市燃气管网及国外客户等，并得到广大用户好评。

■公司秉承“以人为本、回报社会、以质兴企、不断创新、科学管理、节能环保”的指导方针，回顾历史，展望未来，方圆人坚持以满足客户需求为导向，创新装备制造业为己任，打造方圆百年品牌为目标。在各级领导的关怀及专家、客户的大力支持下，通过方圆人的共同努力，方圆阀门的百年梦更加辉煌！

■Fangyuan Valve Group Co. Ltd., is one of the leading manufacturers of industrial valve in China.The company was founded in 1998,after nearly 20 years development, has become a technological enterprises which is engaged in research and development, manufacturing and sales of industrial valve. The company committed to provide a full set of industrial valves project for customers . The headquarters is located in Oubei,Wenzhou,China. As a well-known industry leading enterprises, our Company won the Zhejiang Famous Brand, Credit Management Model Enterprise, Zhejiang Standardization Innovation Enterprise, Meritorious Enterprise and other honorary titles.

■Fangyuan Valve is specializing in the production of flat gate valve, PE steel gate valve, parallel double disc gate valve, ball valve, control gate valve, control ball valve, gate valve, globe valve, check valve, butterfly valve, throttle cut-off venting valve, sleeve type drain valve, double acting throttle check valve, high pressure water injection valve, forged steel valve etc. As a leading enterprise, Fangyuan has reached the advanced world level in research, design and proprietary technology. The core product PE steel gate valve, Anti fouling slab gate valve and other valve have obtained many patents and gradually replaced the imported products. All of our products are authorized by TS、ISO9001、ISO14001、OHSAS18001、API6D、API 600、API 602、CE、API 6FA、API 607、CCF. As a member of “National valve Standardization Technical Committee”,Fangyuan participated in the drafting of the national standards and industry standard such as JB/T5298-2016 Steel plate gate valve for pipeline, GB/T20173-2013 Petroleum, natural gas pipeline transportation systems - pipeline valves , GB/T19672-2005 Technical requirements for pipeline valves , JB/T8691-2013 coverless knife gate valve, JB/T12006-2014 Steel pipe welding ball valve. Our company is also responsible for drafting the GB/T26145-2010 drain valve national standards.As the first class supplier of CNPC, Sinopec,CNOOC,ShenHua Gas,and the excellent supplier of GangHua Gas,China Gas and HuaRun Gas vendor, our products are extensively used for CNPC,Sinopec,CNOOC, sinochem, Port, Wharf,shenhua, Ganghua gas, China gas, Huarun gas, xinao gas, kunlun gas, City gas pipeline network and win a high reputation from our customers.

■With the guidelines of “people-oriented, redound upon society, continuous innovation, scientific management, energy saving and environmental protection " Fangyuan insists on customers first principle, concentrate on one business—designing, manufacturing and marketing advanced technology valves and decide to create a radius of hundred years brand. With the care from leaders and the support from our customers, Fangyuan valve's 100 year dream will be more glorious!

Experience of Fangyuan

方圆历程 >>

许多年前的今天，我们只拥有一片蓝天，探索数载，拼搏数载，奋斗数载。激烈竞争，挑战未来，历经磨练。结合全新思维与崭新理念，集阀门制造科技工程为一体，以石油、化工、水利、电站……等相关行业为市场，亲取多元化的经营战略……方圆在全国各地广泛进行开拓发展。数百家亲密的业务合作伙伴，成为产品优质、高效、环保的行业典范。多年以来，方圆凭借雄厚的企业实力，庞大的营销网络，优秀的人才资源，先进的管理制度及良好的售后服务，得到了社会各界的赞誉。方圆诚愿和所有支持、解理方圆的社会各界竭诚合作，共创美好未来。

On the day many years ago, we held a piece of blue sky only and experienced years explosion, years fight, years hard work, in a sever competition, in the challenge to the future, experienced much tempers, by combining a brand–new way of thinking and a brand–new idea and integrating the valve manufacture, science and technique, regarding petroleum, chemical industry, water conservancy, electric station etc. related industries as the markets, carrying out a multiple operation strategy ,Fangyuan has done the open–up and development widely all over the country and cooperated with hundreds of closed business coordinative partners, thus becoming a model of the industry on quality product, high efficiency and environmental protection, and, for the past years, been appreciated by the circles in the society with the powerful strength, a huge business network, an excellent talent resource, an advanced management system and a good post–sale service. Fangyuan is sincerely willing to cooperate with every social circle who understands and supports it to mutually make a nice future.

FYV 方圆阀门集团有限公司
FANGYUAN VALVE GROUP CO., LTD.

Quality of Fangyuan

方圆品质 >>

方圆的制造流程均遵照国际最先进的行业规范要求，自产品开发就将其生产纳入了一套极其严谨、精确的程序之中。在生产工艺上，每一个环节都要经历苛刻的研发设计程序、检测程序，将产品品质控制到最精密、最严格。对每一细微之处都精益求精，是方圆人义无反顾的职责……

The manufacturing flow in Fangyuan follows the requirements of the most advanced industrial standard of the world by setting an extremely strict and accurate procedure just from the product development and every link in the production workmanship must be experienced in the development, design and detection programs so as to have the product quality precisely and strictly controlled. People of Fangyuan take it as the duty of themselves to keep improvement on every fine point……

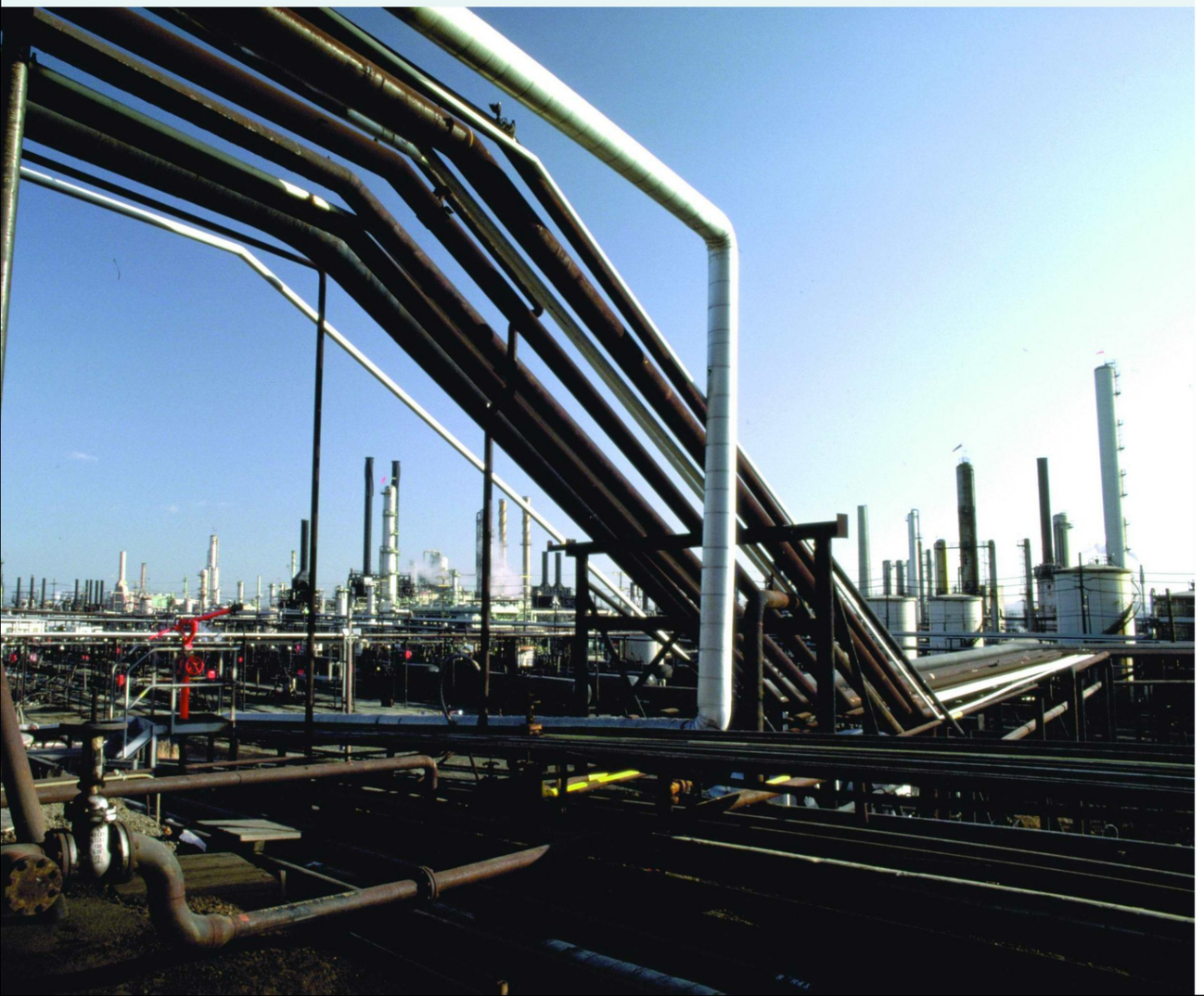

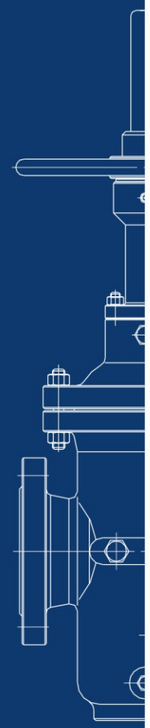

COMPANY SENIORITY

Excellent quality makes Fangyuan a great achievement

企业资质

方圆阀门
FANGYUAN VALVE

□特种设备制造许可证（TS认证） □ISO9001认证 □ISO14001认证 □OHSAS18001认证
□OHSAS18001认证 □API 6D认证 □API 600认证 □API 602认证 □欧共体CE认证
□中石油甲级供应商 □中石化一级供应商 □中海油一级供应商 □神华一级供应商
□港华燃气优秀供应商 □中国燃气优秀供应商 □华润燃气入围供应商

□License aqqroval for special equipment manutacture（TSapproval） □ISO9001 approval
□ISO14001 approval □OHSAS18001 approval □OHSAS18001 approval
□API 6D approval □API 600 approval □API 602 approval □CEof E.E.C.approval
□The first class supplier of CNPC □The first class supplier of Sinopec
□The first class supplier of CNOOC □The first class supplier of ShenHua Gas
□The excellent supplier of GangHua Gas □The excellent supplier of China Gas □HuaRun Gas vendor

特种设备制造许可 | 6A-0641 | 6D-0482 | 国家标准起草单位 | 0035 | 中国城市燃气协会会员 | 中石化资源市场成员 | 高新技术企业 | 国家专利 | ISO9001 | 中石油一级网络成员

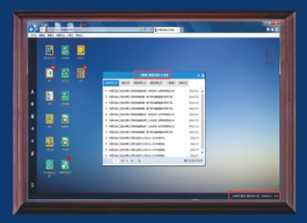

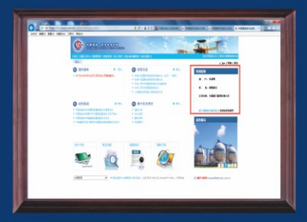

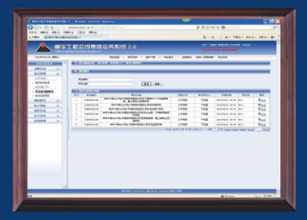

PRODUCT CONTENTS

Excellent quality makes Fangyuan a great achievement

产品目录 >>

卓越品质·成就方圆

Excellent quality makes
Fangyuan a great achievement

平板闸阀系列

Flat-plate gate valve series

自动补偿双闸板平板闸阀

双闸板平板闸阀

自动补偿双闸板平板闸阀

双闸板平板闸阀

无导流孔平板闸阀

电动平板闸阀

高压平板闸阀

燃气闸阀

PE端燃气闸阀

高压平板闸阀

无导流孔平板闸阀

FYV

气动平板闸阀

埋地式燃气闸阀

轻型带导流孔平板闸阀

带导流孔平板闸阀

轻型无导流孔平板闸阀

无导流孔平板闸阀

●型号编制说明 Model schedule illustration

□ □ □ □ □ □ □ □ — □ □

- 阀体材料代号 Body material code
- 压力等级代号 Pressure grade code
- 密封面材质代号 Sealing formation code
- 结构特点代号 Structure manner code
- 结构形式代号 Design feature code
- 连接形式代号 Connecting type code
- 驱动方式代号 Driving manner code
- 阀门类型代号 Valve type code
- 特殊要求代号 Special requirement code
- 系列代号 Series code

● 系列代号：本公司系列代号为FY
Series code: The series code name of our company is FY

● 特殊要求代号：K—抗硫型　L—调节型　ZB—自动补偿
Special requirement code: K—Antisulphur model　L—Adjustment type　ZB—Auto compensation

● 阀门类型代号：Z—闸阀
Valve type code: Z—Gate valve

● 驱动方式代号：4—正齿轮传动　5—伞齿轮传动　6—气动　6s—气动带手动　7—液动　9—电动(手轮传动略)　9_B—防爆电动
Driving manner code: 4—Spur gear transmission　5—Bevel gear transmission　6—Air driving　6s—Take pneumatically manually　7—Hydrodynamic driving　9—Electric driving (Hand wheel driving omitted)　9_B—Explosion electric driving

● 连接形式代号：4—法兰连接　6—对焊连接
Connecting type code: 4—Flange-connecting　6—Butt welding connecting

● 结构形式代号：3—明杆平行式单闸板　4—明杆平行式双闸板
Design feature code:3—Rising-stem parallel single-disc　4—Rising-stem parallel double-disc

● 结构特点代号：W—无导流孔(有导流孔省略)　P—轻型
Structure manner code: W—Non-diversion hole type (Diversion hole type omitted)　P—Light-duty

● 密封面材质代号：Y—硬质合金　H—合金钢　D—渗氮钢　F—增强聚四氟乙烯
Sealing formation code: Y—Hard alloy　H—Alloy steel　D—Nitriding steel　F—Intensified polytetrafluoroethylene(PTFE)

● 压力等级代号：公称压力为MPa的10倍、磅级为实际数
Pressure grade code: The 10 times of the nominal pressure MPa, pound grade io practical number

● 阀门材料代号：C—WCB　I—WC6、ZG1Cr5Mo　V—WC9、ZG20CrMoV　P—CF8、ZG1Cr18Ni9Ti
R—CF8M、ZG1Cr18Ni12Mo2Ti　S—CF3　L—CF3M　F—LCB　N—LC3
Body material code: C—WCB　I—WC6、ZG1Cr5Mo　V—WC9、ZG20CrMoV　P—CF8、ZG1Cr18Ni9Ti
R—CF8M、ZG1Cr18Ni12Mo2Ti　S—CF3　L—CF3M　F—LCB　N—LC3

例1：Z543WF-16C
注释：公称压力为1.6MPa、伞齿轮传动、法兰连接、无导流孔、明杆平行式单闸板闸阀，阀体材质为WCB，密封面材质为增强聚四氟乙烯。
Example1: Z543WF-16C
Denoting 1.6MPa nominal rating pressure, bevel gear transmission, flange-connecting, nondiversion hole, Rising-stem parallel single-disc, WCB valve body material and the Intensified polytetrafluoroethylene(PTFE) as sealing material.
例2：KZ9_B44Y-150Lb
注释：压力等级为Class150、防爆电动、法兰连接、有导流孔、抗硫明杆平行式双闸板闸阀，阀体材质为WCB，密封面材质为硬质合金。
Example2: KZ9_B44Y-150Lb
Denoting Class150 pressure grade, explosion electric driving, flange-connecting, diversion hole type, antisulphur rising-stem parallel double-disc gate valve, WCB valve body material and the hard alloy sealing material.

●产品结构特点 Products Design Features

● 阀体有铸造和焊接两种结构。
Cast and weld two structures with the body

● 阀座采用O形密封圈密封和施加预紧力的浮动阀座结构，使阀门进出口双向密封；并且该结构的启闭力矩仅为普通阀门的1/2，能达到轻松开、关阀门。
The seat ring uses the floating seat ring structure with o-seal ring sealed and pre-tightening force applied to have inlet and outlet dual-way sealed; and the open-close moment with this structure is 1/2 that of the common valves only, able to lightly open and close valves.

● 阀座采用密封面上镶嵌PTFE，具有PTFE对金属和金属对金属的双重密封，PTFE密封面同时清除闸板脏物的作用。
The seat ring uses the sealing face inlaid with PTFE, so has dual seals of PTFE to metal and metal to metal, the PTFE sealing face also acts as removing the dirt on the wedge disc.

● 金属对金属密封的阀门，阀体外部设有注油脂结构，油脂通过注脂器、阀座进入阀门密封面，使阀门达到零泄漏。
For the valve with the metal to metal seal, there is grease injector outside of it, grease gets into the sealing face through the injector and the seat ring to have the valve up to null leak.

● 带导流孔阀门的闸板，无论是全开或是全关始终与密封面吻合，密封面得到保护不受介质直接冲刷，从而延长使用寿命。
The wedge disc of the valve with flow guide hole is always fitted with the sealing face whether in full open or full close status to have the sealing face protected without being directly eroded by the medium so as to extend the duration.

● 阀门在全开时，通道平滑为直线，流阻系数极小，无压力损失，可通毛球清扫管线。
When fully opened, the valve's channel is smooth and linear, with an extremely small flow resisting coefficient and no pressure loss, and the pipeline can be cleaned with hair-ball through it.

● 本阀门采用带自密封能力的填料结构，无需经常调节，开、关极为轻便，且密封性可靠，填料函处设有辅助密封油脂注入结构，密封性能绝对可靠，真正达到零泄漏；解决了通用阀门填料处最容易外漏的弊病。
This valve uses the packing structure with the ability of self-seal, needs no constant adjustment, features very light open and close and a reliable seal. An assisting sealing grease injection structure is set in the packing to have the sealing performance absolutely reliable and get a true null leak, settling the problem for the packing place of universal valves to be easiest leak outward.

● 阀门关闭时能自动卸掉内腔高压(详见工作原理图)，保证使用安全。
Automatic removal of the high pressure in the internal cavity when the valve is about to close (see the working principle diagram for the details) so as to ensure safety.

● 全封闭结构，防护性能好，可适应全天候要求。
Fully sealed structure leaves a good protective property, suitable for the requirement of 24-hour duty.

● 阀门设有指示杆或观察窗以表示阀门的启闭情况。
An indication rod or viewing window is set with the valve to show the open-close condition.

●产品性能规范 Products Performance Specification

压力等级 Pressure		常温试验压力(MPa) Testing pressure at constant temperature (Mpa)				适用温度 Applicable temperature	适用介质 Applicable medium	
		壳体试验 The shell testing	左密封 The left sealing	右密封 Right sealing	低压气密封 Low pressure air tightness		普通型 Ordinary type	抗硫型 Antisulphur type
公称压力 (MPa) Nominal rating pressure (PN)	1.6	2.4	1.76	1.76	0.6	-29～121℃ 或按用户要求 -29 ~ 121℃ or upon the user requirement	石油、天然气、水等非腐蚀性介质 Petroleum, natural gas,water etc.non-corrosive media	含H_2S、CO_2的石油、天然气、水等腐蚀性介质 Petroleum,natural gas, water etc,containing H2S, CO2 corrosive media
	2.5	3.75	2.75	2.75	0.6			
	4.0	6.0	4.4	4.4	0.6			
	6.4	9.6	7.04	7.04	0.6			
	10.0	15.0	11.0	11.0	0.6			
	16.0	24.0	17.6	17.6	0.6			
	25.0	37.8	27.5	27.5	0.6			
	42.0	63.0	46.2	46.2	0.6			
磅级(Lb) Pound grade (Class)	150	3.0	2.2	2.2	0.6			
	300	7.5	5.5	5.5	0.6			
	400	9.6	7.04		0.6			
	600	15.0	11.0	11.0	0.6			
	900	22.5	17.5	17.5	0.6			
	1500	37.5	27.5	27.5	0.6			
	2500	63.0	46.2	46.2	0.6			

●工作原理 Working Principle

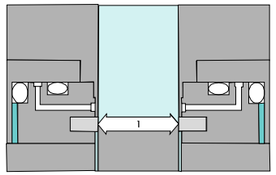

图(1)

1、阀门内部压力相当时(1)，闸板处于闭合状态，阀座表面PTFE密封环形成初始密封，每次阀门开或关时，阀座圈能清洁闸板两侧。(如图1)

With equal pressure throughout the valve(and the gate in closed position), and initial seal (1) is formed with the raised PTFE ring on the faces of the seats. (The seat-inserts clean both sides of the gate each time the valve is opened or closed)

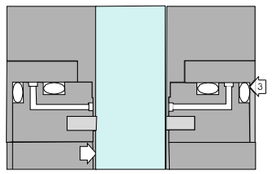

图(2)

2、对阀门施加管道压力时(2)，压力作用于闸板，迫使它贴近出口阀座上的PTFE环，压缩它直到闸板停在钢制阀座上，这样，就形成了双重密封，首先是PTFE对金属密封，然后是金属对金属密封，阀座也被牢固地推到凹槽，在这一点(3)，O形圈阻止任何后部介质流。(如图2)

As line pressure (2) is applied to the valve. it acts on the gate, forcing it against the PTFE ring on the downstream seat, compressing it until the seat against the steel seat. Thus, a double seal is formed...first, a PTFE-to-metal seal; then, metal-to-metal. The seat is also forced firmly into its recess. The O-ring (3) prevents any downstream flow at this point.

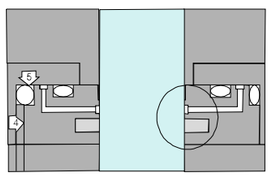

图(3)

3、阀腔压力泄放后，形成进口密封，管道压力作用于进口阀座(4)，使其移向闸板，这时形成PTFE对金属的密封，同时，O形圈(5)与阀座凹槽形成紧密的密封。(如图3)

Upstream seal is provided when valve cavity pressure is bled off. This is caused by the force of line pressure acting against the upstream seat (4) moving the seat against the gate and providing a tight PTFE-to metal seal at this point. At the same time. the O-ring (5) forms a tight seal with the seat recess.

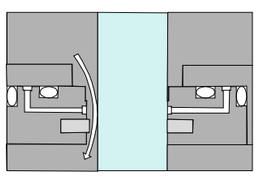

图(4)

4、阀门自动泄放多余的压力，当阀腔压力大于管道压力时，由于热膨胀，进口阀座推向凹槽，阀腔内多余的压力在阀座与闸板之间泄放到管道中。(如图4)

Valve automatically relieves itself of excessive valve cavity pressure. When valve cavity pressure exceeds line pressure...from such causes as thermal expansion...the upstream seat is forced back into its recess and the excess pressure in the valve cavity is bled between the seat and the gate into the line.

●产品主要参数 Main Parameter of the Products

基本型号 Serial models	FY(K)Z43WF、FY(K)Z43WY、FY(K)Z43WD、FY(K)Z44WF、FY(K)Z44WY、FY(K)Z44WD FY(K)Z543WF、FY(K)Z543WY、FY(K)Z543WD、FY(K)Z544WF、FY(K)Z544WY、FY(K)Z544WD FY(K)Z643WF、FY(K)Z643WY、FY(K)Z643WD、FY(K)Z644WF、FY(K)Z644WY、FY(K)Z644WD FY(K)Z943WF、FY(K)Z943WY、FY(K)Z943WD、FY(K)Z944WF、FY(K)Z944WY、FY(K)Z944WD			
压力等级范围 Pressure grade range	PN1.6 ~ 15.0MPa			Class150 ~ 900
通径范围 Drift diameter range	DN25 ~ 1200mm			1" ~ 48"
驱动方式 Driving manner	手轮驱动 Hand wheel driving			齿轮动、气动、液动、电动 Gear driving, air-operating, hydrodynamic driving and electric driving
适用范围 Scope of application	Class150 ~ 300 (PN1.6 ~ 4.0)	Class400 (PN6.4)	Class600 ~ 900 (PN10.0 ~ 15.0)	Class150 ~ 900
	1" ~ 40" (DN25 ~ 1200mm)	1" ~ 28" (DN25 ~ 1100mm)	1" ~ 12" (DN25 ~ 300mm)	1" ~ 48" (DN25 ~ 1200mm)

注：本公司可根据用户要求提供产品。
Note: Our company can provide products at customres'request.

●流量特性分析

带导流孔的平板闸阀，其流量特性等同于同规格的管道，呈等百分比特性，不带导流孔的平板闸阀，其中腔跨度较楔式闸阀小，且属于规则的圆柱体，所以，基本上除压力损失较带导流孔的大外，其余特性基本接近。不带导流孔调节型的平板闸阀其对流量的调节特性优于普通不带导流孔的平板闸阀。

●Flow Charalteristic

The flow characteristic of flat gate valves with a diversion hole is equal to that of pipelines of thesame specification. The characteristic is shown in per centum form. As for valves without a diversion hole, its cavity fly span is smaller than that of wedge gate vales and it is a regular cylindrical object,therefore,characteristics of the valves are similar except that they have a larger pressure loss.Besides, their flux adjustment behavior is better than that of the ones with a deversion hole.

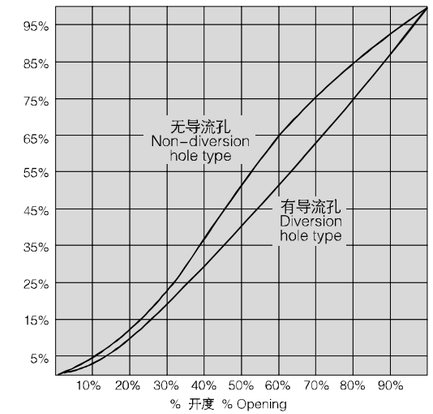

阀门开度—Cv特性曲线表
Valve-opening—Cv characteristic graph

●各类型闸板外形图 Outside Drawing of Different Types of Shutter

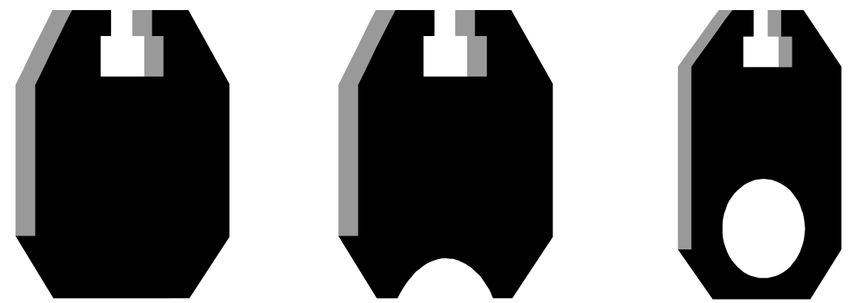

普通型闸板
Ordinary type

调节型闸板
Adjustment type

带导流孔型闸板
Type adiversion hole

●带导流孔型平板闸阀的DN—Cv曲线图 DN-Cv Graph of Flat Valves with a Diversion Hole

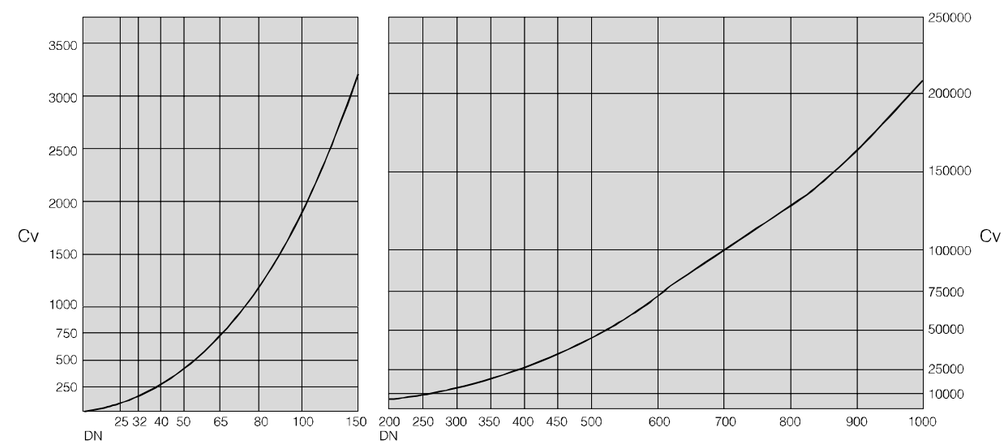

●产品采用标准 Technical Specification

设计依据 Design reference		GB	API
设计标准 Design standard		JB/T5298 GB/T19672	API 6D ASME B16.34
结构长度 Structural length	法 兰 Flanged	GB/T 12221 GB/T19672、JB/T 5298	API 6D ASME B16.10
	焊 接 Welded connection	GB/T15188.1 GB/T19672	
连接法兰 Flanged ends		GB/T9113 JB/T 79	ASME B16.5 MSS SP44
对焊端 Butt-welding ends		GB/T 12224	ASME B16.25
试验和检验 Test & inspection		JB/T 9092	API 6D API 598

注：阀门连接法兰尺寸可根据用户要求设计制造。
Note: The sizes of valve connecting flange can be designed according to customers'requirement.

●主要零件材料 Major Parts Material Form

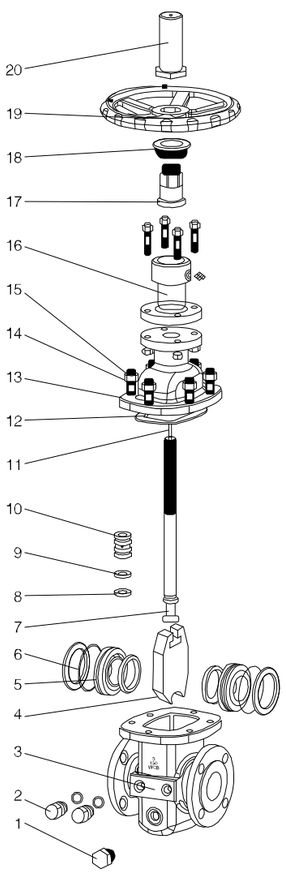

序号 No.	零件名称 Accessory name	材 料 Material			
		普通型 Ordinary type		抗硫型 Antisulphur type	
		GB	ASTM	GB	ASTM
1	排污堵头 Blowdown stops	25+Zn	A105+Zn	1Cr18Ni9	A276-304
2	注脂接头 Grease injection joint	25+Zn	A105+Zn	25+Zn	A105+Zn
3	阀体 Body	WCB	A216-WCB	WCB	A216-WCB
4	闸板 Disc	16Mn+ENP	A105+ENP	1Cr18Ni9	A276-304
5	阀座 Seat	16Mn+PTFE	A105+PTFE	1Cr18Ni9+PTFE	A276-304+PTFE
6	O形圈 O-Ring	NBR	NBR	FPM	FPM
7	阀杆 Stem	2Cr13	A276-420	1Cr18Ni9	A276-304
8	填料座 Packing seat	2Cr13	A276-420	2Cr13	A276-420
9	Y型圈 "Y" ring	NBR	NBR	FPM	FPM
10	密封套 Sealing shroud	2Cr13	A276-420	2Cr13	A276-420
11	指示杆 Indicating stem	1Cr18Ni9	A276-304	1Cr18Ni9	A276-304
12	垫片 Gasket	柔性石墨+1Cr18Ni9 Graphite+1Cr18Ni9	柔性石墨+304 Graphite+304	柔性石墨+1Cr18Ni9 Graphite+1Cr18Ni9	柔性石墨+304 Graphite+304
13	阀盖 Bonnet	WCB	A216-WCB	WCB	A216-WCB
14	螺柱 Stud	35CrMoA	A193-B7	35CrMoA	A193-B7
15	螺母 Nut	45	A194-2H	45	A194-2H
16	支架 Yoke	WCB	A216-WCB	WCB	A216-WCB
17	阀杆螺母 Stem nut	ZQA19-4	C95500	ZQA19-4	C95500
18	压盖 Gland	25	A105	25	A105
19	手轮 Hand wheel	25	A536-60-40-18	25	A536-60-40-18
20	指示罩 Indicating cover	1Cr18Ni9	A276-304	1Cr18Ni9	A276-304

注：阀门主要零部件材质可根据实际工况条件或用户特殊要求设计选用。
Notes: The major parts of the valves can be designed and selected according to actual work condition or customers' specific requirement.

●产品采用标准 Technical Specification

设计依据 Design reference		GB	API
设计标准 Design standard		JB/T5298 GB/T19672	API 6D ASME B16.34
结构长度 Structural length	法 兰 Flanged	GB/T 12221 GB/T19672、JB/T 5298	API 6D ASME B16.10
	焊 接 Welded connection	GB/T15188.1 GB/T19672	
连接法兰 Flanged ends		GB/T9113 JB/T 79	ASME B16.5 MSS SP44
对焊端 Butt-welding ends		GB/T 12224	ASME B16.25
试验和检验 Test & inspection		JB/T 9092	API 6D API 598

注：阀门连接法兰尺寸可根据用户要求设计制造。
Note: The sizes of valve connecting flange can be designed according to customers'requirement.

●主要零件材料 Major Parts Material Form

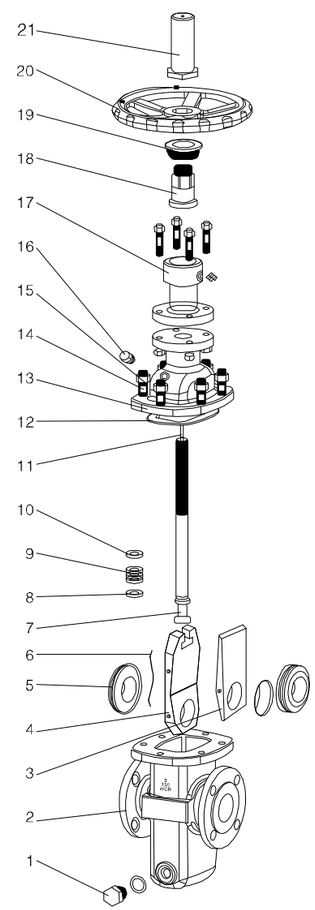

序号 No.	零件名称 Accessory name	材 料 Material			
		普通型 Ordinary type		抗硫型 Antisulphur type	
		GB	ASTM	GB	ASTM
1	排污堵头 Blowdown stops	25+Zn	A105+Zn	1Cr18Ni9	A276-304
2	阀体 Body	WCB	A216-WCB	WCB	A216-WCB
3	副闸板 Disc	16Mn+STL-6	A105+STL-6	1Cr18Ni9+STL-6	A276-304+STL-6
4	主闸板 Disc	16Mn+STL-6	A105+STL-6	1Cr18Ni9+STL-6	A276-304+STL-6
5	阀座 Seat	16Mn+STL-6	A105+STL-6	1Cr18Ni9+STL-6	A276-304+STL-6
6	弹簧 Spring	65Mn	Inconel X-750	1Cr18Ni9	A276-304
7	阀杆 Stem	2Cr13	A276-420	1Cr18Ni9	A276-304
8	填料座 Packing seat	2Cr13	A276-420	2Cr13	A276-420
9	填料 Packing	柔性石墨 Graphite	柔性石墨 Graphite	柔性石墨 Graphite	柔性石墨 Graphite
10	上填料 Up Packing	2Cr13	A276-420	2Cr13	A276-420
11	指示杆 Indicating stem	1Cr18Ni9	A276-304	1Cr18Ni9	A276-304
12	垫片 Gasket	柔性石墨+1Cr18Ni9 Graphite+1Cr18Ni9	柔性石墨+304 Graphite+304	柔性石墨+1Cr18Ni9 Graphite+1Cr18Ni9	柔性石墨+304 Graphite+304
13	阀盖 Bonnet	WCB	A216-WCB	WCB	A216-WCB
14	螺柱 Stud	35CrMoA	A193-B7	35CrMoA	A193-B7
15	螺母 Nut	45	A194-2H	45	A194-2H
16	泄压阀 Relief valve	45	A105	45	1045 A105
17	支架 Yoke	WCB	A216-WCB	WCB	A216-WCB
18	阀杆螺母 Stem nut	ZQA19-4	C95500	ZQA19-4	C95500
19	压盖 Gland	25	A105	25	A105
20	手轮 Hand wheel	25	A536-60-40-18	25	A536-60-40-18
21	指示罩 Indicating cover	1Cr18Ni9	A276-304	1Cr18Ni9	A276-304

注：阀门主要零部件材质可根据实际工况条件或用户特殊要求设计选用。
Notes: The major parts of the valves can be designed and selected according to actual work condition or customers' specific requirement.

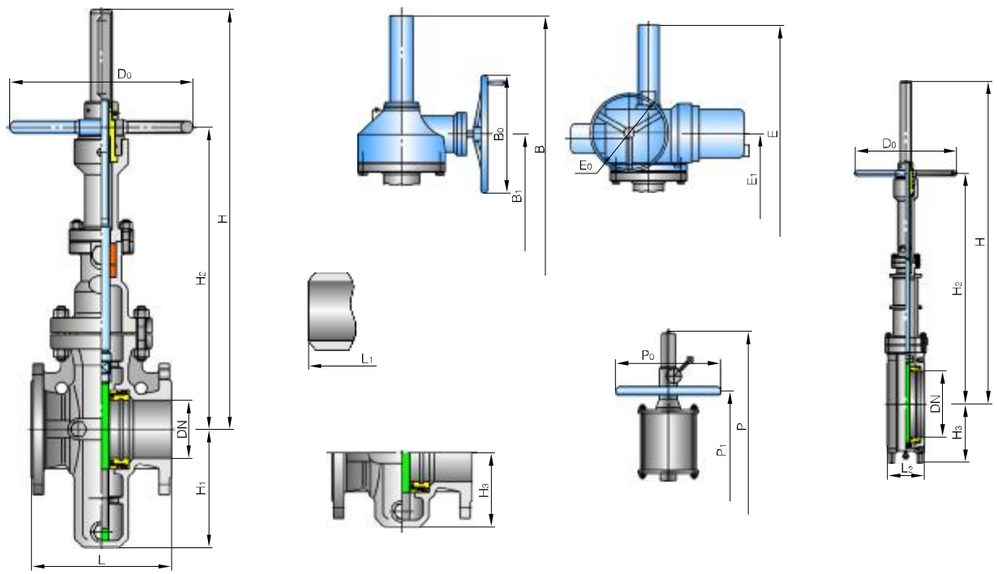

●主要外形尺寸 Main Size of Outside

型号 Model：(K)Z5(6、9)4(6)3(4)W(P)(F、Y、D)　PN1.6、2.5MPa　PN2.0MPa　API 6D Class150

DN (mm)	NPS (in)	法兰 Flange	对焊 Butt welding	轻型 Light-duty	手 动 Hand-operated			齿 动 Geared driving			齿动装置 Geared driving	气动 液动 Air-operating and Fluid driving			电 动 Electric driving device			电动装置 Electric driving device	无导流孔 Non-diversion hole type	有导流孔 Diversion hole type
		L	L_1	L_2	H	H_2	D_0	B	B_1	B_0		P	P_1	P_0	E	E_1	E_0		H_3	H_1
25	1	127	127	–	360	250	180	–	–	–	–	–	–	–	–	–	–	–	60	85
32	1¼	140	140	–	375	260	180	–	–	–	–	–	–	–	–	–	–	–	71	103
40	1½	165	165	–	410	290	250	–	–	–	–	–	–	–	–	–	–	–	75	115
50	2	178	216	108	450	315	250	–	–	–	–	525	430	250	–	–	–	–	85	122
65	2½	190	241	112	550	420	300	–	–	–	–	648	560	300	–	–	–	–	91	154
80	3	203	283	114	610	428	300	–	–	–	–	730	630	300	–	–	–	–	109	169
100	4	229	305	127	700	494	300	770	650	310	BA-0	850	720	300	912	790	200	SMC-04	121	193
150	6	267	403	140	895	625	350	965	800	310	BA-0	1120	920	350	1107	920	500	SMC-03	178	283
200	8	292	419	152	1130	784	350	1200	960	310	BA-0	1430	1160	350	1390	1120	500	SMC-03	211	352
250	10	330	457	165	1290	937	400	1360	1080	310	BA-0	1665	1380	400	1550	1250	500	SMC-03	215	440
300	12	356	502	178	1480	1080	450	1560	1200	310	BA-0	1930	1550	450	1740	1400	305	SMC-00	245	514
350	14	381	572	190	1660	1283	500	1740	1350	460	BA-1	2185	1750	450	1913	1550	305	SMC-00	280	602
400	16	406	610	216	1850	1417	500	1930	1500	460	BA-1	2450	2000	500	2103	1620	305	SMC-00	310	678
450	18	432	660	222	2080	1489	600	2160	1680	460	BA-1	2755	2250	500	2365	1830	305	SMC-0	346	785
500	20	457	711	229	2300	1672	700	2420	1850	460	BA-1	3050	2450	600	2585	1980	305	SMC-0	363	855
600	24	508	813	267	2680	2012	800	2800	2120	460	BA-2	3580	2900	800	2990	2300	305	SMC-1	442	1045
700	28	610	914	292	3080	2250	800	3200	2450	460	BA-2	4130	3350	800	3390	2600	305	SMC-1	505	1190
800	32	660	965	318	3491	2550	1000	3640	2800	460	BA-2	–	–	–	3850	2980	305	SMC-1	560	1350
900	36	800	1016	330	3897	2850	1000	4050	3080	600	BA-3	–	–	–	4260	3200	458	SMC-2	610	1510
1000	40	811	–	460	4317	3250	1200	4467	3400	600	BA-3	–	–	–	4677	3600	458	SMC-2	715	1715
1050	42	1124	–	–	–	–	–	4650	3550	600	BA-3	–	–	–	4870	3790	458	SMC-2	785	1795
1100	44	1219	–	–	–	–	–	4870	3700	620	BAA-3	–	–	–	5060	3950	610	SMC-3	867	1894
1200	48	1264	–	–	–	–	–	5350	4100	620	BAA-3	–	–	–	5500	4250	610	SMC-3	993	2150

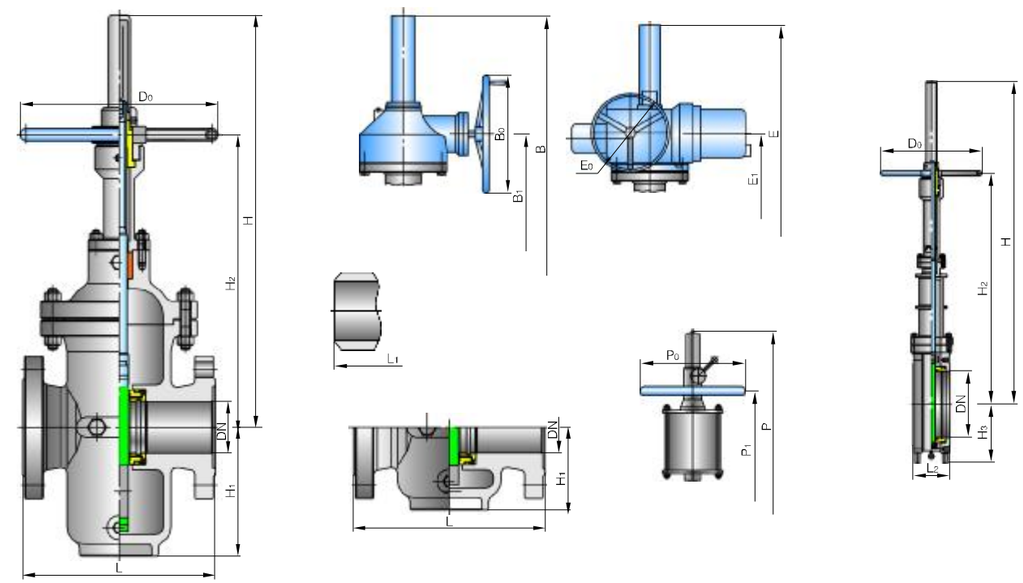

●主要外形尺寸 Main Size of Outside

型号 Model：(K)Z5(6、9)4(6)3(4)W(P)(F、Y、D)　PN4.0MPa　PN5.0MPa　API 6D Class300

DN (mm)	NPS (in)	法兰 Flange		对焊 Butt welding	手 动 Hand-operated			齿 动 Geared driving			齿动装置 Geared driving	气动 液动 Air-operating and Fluid driving			电 动 Electric driving device			电动装置 Electric driving device	无导流孔 Non-diversion hole type	有导流孔 Diversion hole type
		L																		
		GB	API	L_1	H	H_2	D_0	B	B_1	B_0		P	P_1	P_0	E	E_1	E_0		H_3	H_1
25	1	165	165	165	370	260	180	–	–	–	–	–	–	–	–	–	–	–	70	90
32	1¼	178	178	178	385	270	180	–	–	–	–	–	–	–	–	–	–	–	80	115
40	1½	190	190	190	420	300	250	–	–	–	–	–	–	–	–	–	–	–	85	130
50	2	216	216	216	458	325	250	–	–	–	–	533	435	200	–	–	–	–	100	137
65	2½	241	241	241	555	420	300	–	–	–	–	653	565	200	–	–	–	–	106	169
80	3	283	283	283	615	430	300	–	–	–	–	735	635	250	–	–	–	–	124	184
100	4	305	305	305	710	500	300	770	650	310	BA-0	860	730	250	912	790	200	SMC-04	146	218
150	6	403	403	403	900	625	350	965	800	310	BA-0	1125	925	350	1155	960	500	SMC-03	206	311
200	8	419	419	419	1135	790	350	1200	960	310	BA-0	1435	1165	350	1390	1120	305	SMC-00	241	382
250	10	457	457	457	1401	1040	400	1360	1090	310	BA-0	1776	1450	400	1543	1240	305	SMC-00	303	476
300	12	502	502	502	1580	1150	450	1560	1200	310	BA-1	2030	1620	450	1745	1400	305	SMC-0	372	545
350	14	762	762	762	–	–	–	1740	1350	460	BA-1	2305	1900	500	1945	1580	305	SMC-0	405	645
400	16	838	838	838	–	–	–	1930	1540	460	BA-1	2558	2100	600	2135	1640	305	SMC-0	450	728
450	18	914	914	914	–	–	–	2160	1700	460	BA-1	2835	2320	700	2385	1840	305	SMC-1	490	800
500	20	991	991	991	–	–	–	2420	1850	460	BA-2	3120	2510	800	2660	2050	305	SMC-1	520	930
600	24	1143	1143	1143	–	–	–	2800	2120	460	BA-2	3670	2980	900	3010	2310	305	SMC-1	600	1100
700	28	1346	1346	1346	–	–	–	3200	2460	460	BA-2	–	–	–	3480	2680	458	SMC-2	665	1260
800	32	1524	1524	1524	–	–	–	3640	2800	460	BA-2	–	–	–	3890	3020	458	SMC-2	720	1420
900	36	1727	1727	1727	–	–	–	4050	3080	600	BA-3	–	–	–	4260	3200	458	SMC-2	820	1580
1000	40	1880	1880	1880	–	–	–	4467	3400	600	BA-3	–	–	–	4677	3600	458	SMC-2	950	1720
1050	42	1981	1981	1981	–	–	–	4650	3550	600	BA-3	–	–	–	4870	3790	610	SMC-3	1070	1800

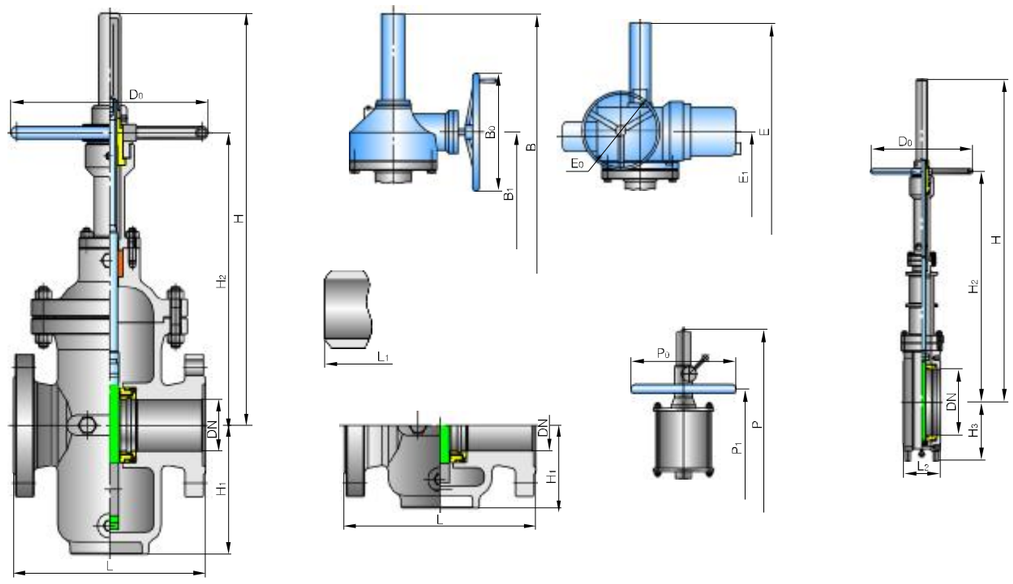

●主要外形尺寸 Main Size of Outside

型号 Model：(K)Z5(6、9)4(6)3(4)W(F、Y、D)　　PN6.4MPa　　API 6D Class400

DN (mm)	NPS (in)	法兰 Flange L		对焊 Butt welding	手 动 Hand-operated			齿 动 Geared driving			齿动装置 Geared driving	气动 液动 Air-operating and Fluid driving			电 动 Electric driving device			电动装置 Electric driving device	无导流孔 Non-diversion hole type	有导流孔 Diversion hole type
		GB	API	L_1	H	H_2	D_0	B	B_1	B_0		P	P_1	P_0	E	E_1	E_0		H_3	H_1
50	2	216	292	292	458	325	300	505	430	310	BA-0	533	435	200	647	560	200	SMC-04	108	158
65	2½	241	330	330	555	420	300	560	470	310	BA-0	653	565	200	702	610	200	SMC-04	125	190
80	3	283	356	356	615	430	350	610	510	310	BA-0	735	635	250	752	650	500	SMC-03	145	225
100	4	305	406	406	710	500	350	770	650	310	BA-0	860	730	250	912	790	500	SMC-03	165	255
150	6	403	495	495	900	625	400	965	800	310	BA-0	1125	925	350	1138	950	305	SMC-00	220	330
200	8	419	597	597	1135	790	500	1200	960	310	BA-0	1435	1165	350	1373	1100	305	SMC-00	280	410
250	10	457	673	673	1401	1040	500	1370	1090	460	BA-1	1776	1450	400	1575	1280	305	SMC-0	303	490
300	12	502	762	762	1580	1150	600	1560	1200	460	BA-1	2030	1620	450	1725	1390	305	SMC-0	372	570
350	14	762	826	826	–	–	–	1740	1350	460	BA-1	2305	1900	500	1930	1570	305	SMC-1	405	650
400	16	838	902	902	–	–	–	1970	1540	460	BA-2	2558	2100	600	2210	1700	305	SMC-1	450	735
450	18	914	978	978	–	–	–	2260	1700	460	BA-2	2835	2320	700	2500	1940	305	SMC-1	490	810
500	20	991	1054	1054	–	–	–	2420	1850	460	BA-2	3120	2510	800	2630	2020	458	SMC-2	520	935
600	24	1143	1232	1232	–	–	–	2800	2120	600	BA-3	–	–	–	3050	2350	458	SMC-2	600	1170
700	28	1346	1397	1397	–	–	–	3230	2460	600	BA-3	–	–	–	3480	2680	458	SMC-2	665	1330
800	32	1524	1524	1524	–	–	–	3640	2800	600	BA-3	–	–	–	3890	3020	458	SMC-2	720	1420
900	36	1727	1727	1727	–	–	–	4050	3080	600	BA-3	–	–	–	4260	3200	458	SMC-2	820	1580
1050	40	1880	1880	1880	–	–	–	4467	3400	600	BA-3	–	–	–	4677	3600	610	SMC-3	950	1720
1100	42	1981	1981	1981	–	–	–	4650	3550	600	BAA-3	–	–	–	4870	3790	610	SMC-3	1070	1800

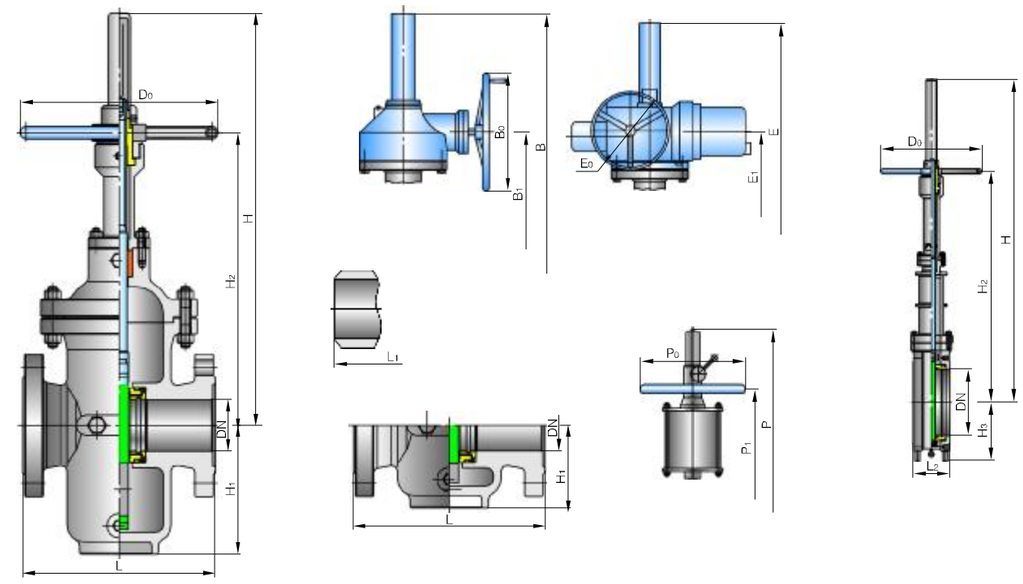

●主要外形尺寸 Main Size of Outside

型号 Model：(K)Z5(6、9)4(6)3(4)W(F、Y、D)　　PN10.0MPa　　API 6D Class600

DN (mm)	NPS (in)	法兰 Flange L		对焊 Butt welding	手 动 Hand-operated			齿 动 Geared driving			齿动装置 Geared driving	气动 液动 Air-operating and Fluid driving			电 动 Electric driving device			电动装置 Electric driving device	无导流孔 Non-diversion hole type	有导流孔 Diversion hole type
		GB	API	L_1	H	H_2	D_0	B	B_1	B_0		P	P_1	P_0	E	E_1	E_0		H_3	H_1
50	2	292	292	292	468	335	300	505	430	310	BA-0	543	445	200	647	560	200	SMC-04	108	158
65	2½	330	330	330	565	430	300	560	470	310	BA-0	663	570	200	702	610	200	SMC-04	125	190
80	3	356	356	356	625	440	350	610	510	310	BA-0	745	640	250	752	650	500	SMC-03	145	225
100	4	432	432	432	720	510	350	770	650	310	BA-0	870	740	250	950	820	500	SMC-03	165	255
150	6	559	559	559	910	630	400	965	800	310	BA-0	1135	930	350	1138	950	305	SMC-0	220	330
200	8	660	660	660	1145	800	500	1200	960	310	BA-1	1445	1170	350	1403	1130	305	SMC-0	280	410
250	10	787	787	787	1411	1050	500	1370	1090	460	BA-1	1786	1460	400	1575	1280	305	SMC-0	330	490
300	12	838	838	838	1590	1160	600	1560	1200	460	BA-1	2040	1630	450	1750	1410	305	SMC-1	380	570
350	14	889	889	889	–	–	–	1740	1350	460	BA-2	–	–	–	1930	1570	305	SMC-1	430	650
400	16	991	991	991	–	–	–	1970	1540	460	BA-2	–	–	–	2210	1700	305	SMC-1	480	735
450	18	1092	1092	1092	–	–	–	2260	1700	460	BA-2	–	–	–	2500	1940	458	SMC-2	530	810
500	20	1194	1194	1194	–	–	–	2420	1850	460	BA-2	–	–	–	2630	2020	458	SMC-2	580	905
550	22	1295	1295	1295	–	–	–	2685	2010	600	BA-3	–	–	–	2840	2240	610	SMC-3	640	1075
600	24	1397	1397	1397	–	–	–	2985	2190	600	BA-3	–	–	–	3100	2450	610	SMC-3	700	1160
650	26	1448	1448	1448	–	–	–	3160	2390	600	BA-3	–	–	–	3310	2610	610	SMC-3	760	1220
700	28	1549	1549	1549	–	–	–	3350	2550	600	BA-3	–	–	–	3500	2740	610	SMC-3	830	1330
750	30	1651	1651	1651	–	–	–	3470	2680	600	BAA-3	–	–	–	3690	2890	610	SMC-3	900	1415
800	32	1778	1778	1778	–	–	–	3880	2910	600	BAA-3	–	–	–	3900	3050	610	SMC-3	–	1540
900	36	2083	2083	2083	–	–	–	4250	3115	620	BAA-4	–	–	–	4330	3380	610	SMC-4	–	1650
1000	40	2150	2150	2150	–	–	–	4580	3395	620	BAA-4	–	–	–	4760	3710	610	SMC-4	–	1760
1050	42	2300	2300	2300	–	–	–	4885	3655	620	BAA-4	–	–	–	4970	3860	760	SMC-5	–	1840

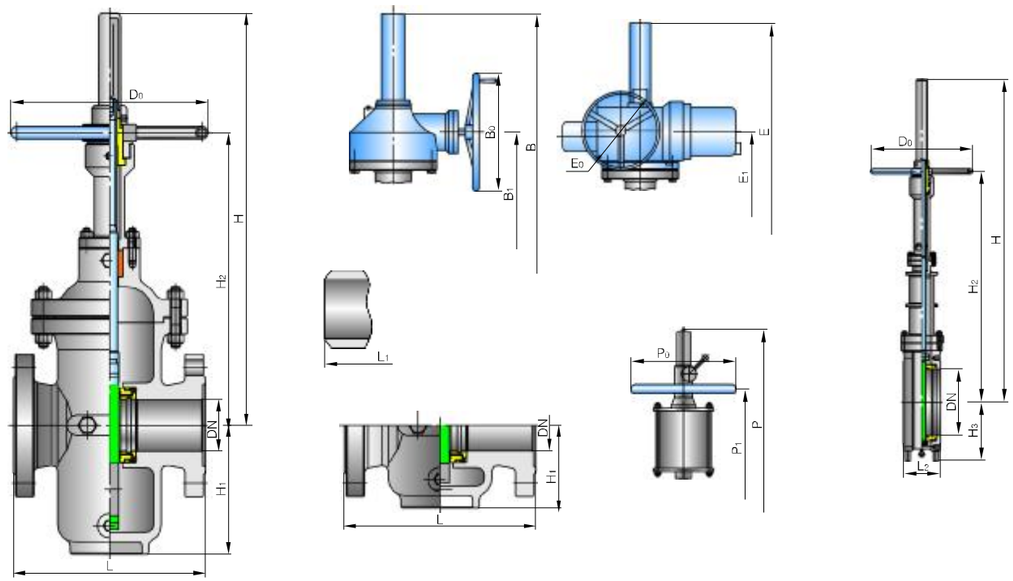

●主要外形尺寸 Main Size of Outside

型号 Model：(K)Z5(6、9)4(6)3(4)W(F、Y、D)　　PN16.0MPa　　API 6D Class900

DN (mm)	NPS (in)	法兰 Flange L		对焊 Butt welding	手 动 Hand-operated			齿 动 Geared driving			齿动装置 Geared driving	气动 液动 Air-operating and Fluid driving			电 动 Electric driving device			电动装置 Electric driving device	无导流孔 Non-diversion hole type	有导流孔 Diversion hole type
		GB	API	L_1	H	H_2	D_0	B	B_1	B_0		P	P_1	P_0	E	E_1	E_0		H_3	H_1
50	2	368	368	368	473	335	300	525	450	310	BA-0	548	450	250	647	560	500	SMC-03	108	158
65	2½	419	419	419	570	435	300	585	490	310	BA-0	668	580	300	702	610	500	SMC-03	125	190
80	3	381	381	381	630	445	350	635	530	310	BA-0	750	650	350	752	650	305	SMC-00	145	225
100	4	457	457	457	725	515	350	800	680	310	BA-0	875	745	400	950	820	305	SMC-00	165	255
150	6	610	610	610	915	640	400	995	830	310	BA-1	1140	940	500	1138	950	305	SMC-0	220	330
200	8	737	737	737	1150	800	500	1250	1000	460	BA-1	1450	1180	550	1403	1130	305	SMC-0	280	410
250	10	838	838	838	1416	1055	500	1420	1140	460	BA-1	1791	1465	600	1575	1280	305	SMC-1	330	490
300	12	965	965	965	1595	1165	600	1600	1230	460	BA-2	2045	1635	700	1750	1410	305	SMC-1	380	570
350	14	1029	1029	1029	–	–	–	1890	1450	460	BA-2	–	–	–	1930	1570	305	SMC-1	–	690
400	16	1130	1130	1130	–	–	–	2175	1660	600	BA-3	–	–	–	2210	1700	458	SMC-2	–	800
450	18	1219	1219	1219	–	–	–	2355	1800	600	BA-3	–	–	–	2500	1940	458	SMC-2	–	890
500	20	1321	1321	1321	–	–	–	2520	1920	600	BA-3	–	–	–	2630	2020	610	SMC-3	–	985
600	24	1549	1549	1549	–	–	–	3050	2240	620	BA-4	–	–	–	3100	2450	610	SMC-3	–	1150

●产品结构特点 Products Design Features

本公司ZF系列注水阀均为高压平板闸阀。结构合理，密封可靠，操作轻便。密封面均喷焊硬质合金，具有防腐、耐磨、耐冲蚀等优点，且可用于节流。尤其适用于工作压力≤42MPa，工作温度≤120℃的水、油、泥浆、天然气管线作控制介质流动的启闭及调节装置。

The ZF series water injecting valves are high pressure flat-plate gate valves. with a reasonable structure, a reliable seal and an easy operation and the sealing face is built-up welded with carbide alloy, features anti-corrosion, anti-wear and anti-erosion and can be used for throttle, especially suitable for the water, oil, mud pulpy, natural gas pipeline as the open-close and adjusting device to control the medium flowing.

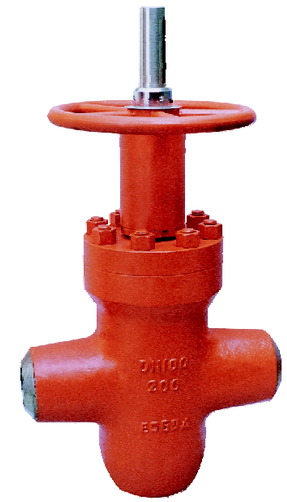

●产品采用标准 Technical Specification

设计标准 Design standard		GB/T19672、JB/T5298、API 6D
结构长度 Structural length	法 兰 Flanged	GB/T 12221、GB/T19672、JB/T 5298
	焊 接 Welded connection	GB/T15188.1、GB/T19672
连接法兰 Flanged ends		GB/T9113、JB/T 79、ANSI 16.5
对焊端 Butt-welding ends		GB/T 12224
试验和检验 Test & inspection		GB/T3927、JB/T 9092

●产品性能规范 Products Performance Specification

适用范围 Scope of application	PN10.0～42.0MPa	DN25～200mm
适用温度 Applicable temperature	–29～121℃	
适用介质 Applicable medium	普通型 Ordinary type	石油、天然气、成品油、水等 Petroleum, natural gas, readymade oil, water,etc.
	抗硫型 Antisulphur type	含H_2S、CO_2的石油、天然气等 Petroleum,natural gas etc,containing H_2S, CO_2
连接形式 Connecting type	法兰端、焊接端、卡箍端 Flange end, welded end, keeper end	
驱动方式 Driving manner	手动、电动、气动等 Manual, electric, pneumatic etc. actuations	

主要零件材料 Major Parts Material Form

零件名称 Accessory name	阀体、阀盖 Valve body, valve covering	闸 板 Floodgate board	阀 杆 Valve stem	阀 座 Valve seat	阀杆螺母 Valve stem nut	填 料 Packing
"Z" 型 "Z" Type	WCB、铬钼钢 WCB, Cr Mo steel	合金钢(焊硬质合金) Alloy steel (weld the hard alloy)	不锈钢 Stainless steel	合金钢(焊硬质合金) Alloy steel (weld the hard alloy)	铝青铜 Aluminium bronze	聚四氟乙烯、氟橡胶 PTFE, fluorine rubber
"KZ" 型 "KZ" Type			抗硫不锈钢 Sulfur resisting stainless steel			

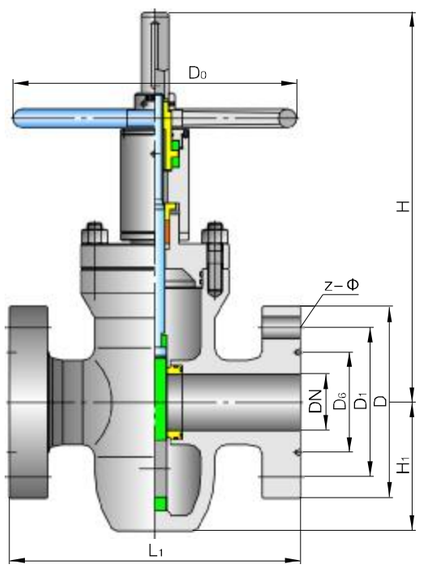

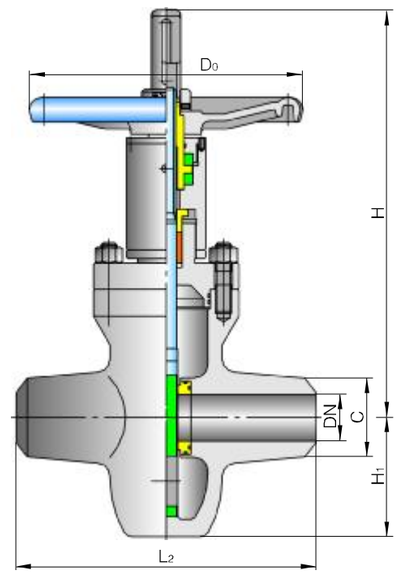

●主要外形尺寸 Main Size of Outside

型号 Model：ZF43Y、ZF63Y、Z83Y

公称压力 Nominal pressure PN(MPa)	DN (mm)	尺寸 Dimensions(mm)				
		L_1	L_2	D_0	H_1	H
10.0 16.0	25	225	254	180	85	350
	32	260	260	220	98	380
	40	260	260	260	110	400
	50	300	300	310	120	450
	65	340	340	350	133	510
	80	380	380	400	158	580
	100	472	430	460	198	650
	125	500	500	460	240	750
	150	550	550	470	260	846
	200	650	650	600	358	1045
	250	775	775	650	415	1225
	300	900	900	700	462	1425
20.0 25.0	25	230	230	180	87	350
	32	260	260	220	100	380
	40	260	260	260	112	400
	50	300	300	310	122	450
	65	340	340	350	135	510
	80	380	380	400	160	580
	100	430	430	460	198	650
	125	500	500	460	240	750
	150	550	550	470	260	846
	200	650	650	600	358	1045
	250	775	775	600	415	1225
	300	900	900	650	462	1425

公称压力 Nominal pressure PN(MPa)	DN (mm)	尺寸 Dimensions(mm)				
		L_1	L_2	D_0	H_1	H
32.0 35.0	25	230	254	180	90	350
	32	260	279	220	103	380
	40	260	305	260	115	400
	50	300	368	310	125	450
	65	340	419	350	137	510
	80	380	470	400	164	580
	100	430	546	460	198	650
	125	500	673	460	240	750
	150	550	705	470	260	846
	200	650	832	600	358	1045
	250	991	991	650	415	1225
	300	1130	1130	700	462	1425
40.0 42.0	25	230	254	180	92	350
	32	260	279	220	105	380
	40	260	305	260	117	400
	50	300	368	310	127	450
	65	340	419	350	139	510
	80	380	470	400	166	580
	100	430	546	460	198	650
	125	500	673	460	240	750
	150	550	705	470	260	846
	200	650	832	600	358	1045
	250	991	991	650	415	1225
	300	1130	1130	700	462	1425

●产品结构特点 Products Design Features

自动补偿平衡式双平板闸阀是一种结构新颖的闸阀产品，它具有启闭力矩小、速度快、振动小、使用寿命长、操作安全可靠等特点，主要用于气、液体输送管道的切断或泄放。

Auto compensation balanced double parallel gate valve is a product with new structure, which has small open-and-close moment, high speed, little vibration,long performance life and reliable operation,It is mainly applied to cut-off or discharge of gas and liquid delivery pipelines.

系列平行式双闸阀结构特点为：

The structural features include:

- 阀门采用两块互相平行的闸板及其楔紧装置组成的密封结构取代传统的楔式闸阀结构。
  A sealing structure consists of two parallel shutters and a wedge-tightening device it is taken to replace the traditional wedg eshaped gate valve structure;
- 阀门密封机构各零件互相分离，即使在温度变化时引起变形也仍能保证密封，且不会因高温膨胀而使闸板挤住打不开。
  The components of valve sealing mechanism are separated so the sealing can retain when transmuting caused by the tem perature changes,and will not jam where swelling in high temperature;
- 阀门密封采用耐磨、耐腐蚀材料制成，延长了阀门的使用寿命。
  The sealing surface of the valve adopts abrasion-resistant and anti-corrosive materials which can lengthen the performance life of the valve;
- 在高温、高压情况下，进口一侧闸板设计为可泄压方式，防止由于温度变化而引起的腔内压力异常升高的现象，保证使用安全。
  In high temperature or pressure,the disc on inlet side can be designed in pressure relief style which can avoid abnormal pressure rising in cavity caused by temperature changes,thus to ensure used safety.
- 全封闭结构，防护性能好，可全天候使用。
  The valve adopts full-shut structure which has good protection function and can be used in all weather.

●产品主要参数 Main Parameter of the Products

基本型号 Serial models	FY(K)Z44WH(Y)、FY(K)Z544WH(Y)、FY(K)Z644WH(Y)、FY(K)Z744WH(Y)、FY(K)Z944WH(Y)			
	FY(K)Z64WH(Y)、FY(K)Z564WH(Y)、FY(K)Z664WH(Y)、FY(K)Z764WH(Y)、FY(K)Z964WH(Y)			
压力等级范围 Pressure grade range	PN1.6 ~ 10.0MPa			Class150 ~ 600
通径范围 Drift diameter range	DN50 ~ 900mm			2" ~ 36"
驱动方式 Driving manner	手轮驱动 Hand wheel driving			齿轮动、气动、液动、电动 Gear driving, air-operating, hydrodynamic driving and electric driving
适用范围 Scope of application	Class150 ~ 300 (PN1.6 ~ 4.0)	Class400 (PN6.4)	Class600 (PN10.0)	4" ~ 36" (DN100 ~ 900mm)
	2" ~36" (DN50 ~ 900mm)	2" ~36" (DN50 ~ 900mm)	2" ~ 32" (DN50 ~ 800mm)	

注：本公司可根据用户要求提供产品。
Notes: Our company can provide products at customres'request.

●产品性能规范 Products Performance Specification

压力等级 Pressure		常温试验压力(MPa) Testing pressure at constant temperature (Mpa)				适用温度 Applicable temperature	适用介质 Applicable medium	
		壳体试验 The shell testing	左密封 The left sealing	右密封 Right sealing	低压气密封 Low pressure air tightness		普通型 Ordinary type	抗硫型 Antisulphur type
公称压力 (MPa) Nominal rating pressure (PN)	1.6	2.4	1.76	1.76	0.6	-29 ~ 121℃ 或按用户要求 -29 ~ 121℃ or upon the user requirement	石油、天然气、水等非腐蚀性介质 Petroleum, natural gas,water etc.non-corrosive media	含H_2S、CO_2的石油、天然气、水等腐蚀性介质 Petroleum,natural gas, water etc,containing H_2S, CO_2 corrosive media
	2.5	3.75	2.75	2.75	0.6			
	4.0	6.0	4.4	4.4	0.6			
	6.4	9.6	7.04	7.04	0.6			
	10.0	15.0	11.0	11.0	0.6			
磅级(Lb) Pound grade (Class)	150	3.0	2.2	2.2	0.6			
	300	7.5	5.5	5.5	0.6			
	600	15.0	11.0	11.0	0.6			

●产品采用标准 Technical Specification

设计依据 Design reference		GB	API
设计标准 Design standard		JB/T5298 GB/T19672	API 6D ASME B16.34
结构长度 Structural length	法 兰 Flanged	GB/T 12221 GB/T19672、JB/T 5298	API 6D ASME B16.10
	焊 接 Welded connection	GB/T15188.1 GB/T19672	
连接法兰 Flanged ends		GB/T9113 JB/T 79	ASME B16.5 MSS SP44
对焊端 Butt-welding ends		GB/T 12224	ASME B16.25
试验和检验 Test & inspection		JB/T 9092	API 6D API 598

注：阀门连接法兰尺寸可根据用户要求设计制造。
Note: The sizes of valve connecting flange can be designed according to customers'requirement.

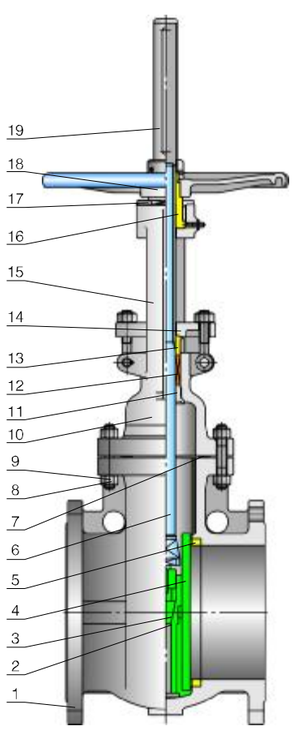

●主要零件材料 Major Parts Material Form

序号 No.	零件名称 Accessory name	材 料 Material			
		普通型 Ordinary type		抗硫型 Antisulphur type	
		GB	ASTM	GB	ASTM
1	阀体 Body	WCB	A216-WCB	WCB	A216-WCB
2	闸板架 Disc frame	WCB	A216-WCB	WCB	A216-WCB
3	楔块 Wedge block	WCB+STL	A216-WCB+STL	WCB+STL	A216-WCB+STL
4	闸板 Disc	25+STL	A105+STL	1Cr18Ni9+STL	A276-304+STL
5	阀座 Seat	25+STL	A105+STL	1Cr18Ni9+STL	A276-304+STL
6	阀杆 Stem	2Cr13	A276-410	1Cr18Ni9	A276-304
7	垫片 Gasket	柔性石墨+1Cr18Ni9 Graphite+1Cr18Ni9	柔性石墨+304 Graphite+304	柔性石墨+1Cr18Ni9 Graphite+1Cr18Ni9	柔性石墨+304 Graphite+304
8	螺柱 Stud	35CrMoA	A193-B7	35CrMoA	A193-B7
9	螺母 Nut	35	A194-2H	35	A194-2H
10	阀盖 Bonnet	WCB	A216-WCB	WCB	A216-WCB
11	上密封座 Back seat	1Cr13	A276-410	1Cr18Ni9	A276-304
12	填料 Packing	柔性石墨 Graphite			
13	填料压套 Packing press-sleeve	2Cr13	A276-420	2Cr13	A276-420
14	填料压盖 Packing gland	WCB	A276-WCB	WCB	A216-WCB
15	支架 Yoke	WCB	A216-WCB	WCB	A216-WCB
16	阀杆螺母 Stem nut	ZQA19-4	C95500	ZQA19-4	C95500
17	压盖 Gland	25	A105	25	A105
18	手轮 Hand wheel	QT400-17	A536-60-40-18	QT400-17	A536-60-40-18
19	指示罩 Indicating cover	25	A105	25	A105

注：阀门主要零部件材质可根据实际工况条件或用户特殊要求设计选用。
Notes: The major parts of the valves can be designed and selected according to actual work condition or customers' specific requirement.

●产品采用标准 Technical Specification

设计依据 Design reference		GB	API
设计标准 Design standard		JB/T5298 GB/T19672	API 6D ASME B16.34
结构长度 Structural length	法 兰 Flanged	GB/T 12221 GB/T19672、JB/T 5298	API 6D ASME B16.10
	焊 接 Welded connection	GB/T15188.1 GB/T19672	
连接法兰 Flanged ends		GB/T9113 JB/T 79	ASME B16.5 MSS SP44
对焊端 Butt-welding ends		GB/T 12224	ASME B16.25
试验和检验 Test & inspection		JB/T 9092	API 6D API 598

注：阀门连接法兰尺寸可根据用户要求设计制造。
Note: The sizes of valve connecting flange can be designed according to customers'requirement.

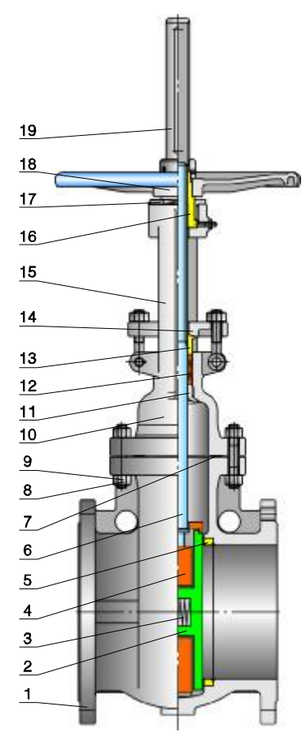

●主要零件材料 Major Parts Material Form

序号 No.	零件名称 Accessory name	材 料 Material			
		普通型 Ordinary type		抗硫型 Antisulphur type	
		GB	ASTM	GB	ASTM
1	阀体 Body	WCB	A216-WCB	WCB	A216-WCB
2	闸板 Disc	25+STL	A105+STL	1Cr18Ni9+STL	A276-304+STL
3	弹簧 Spring	Inconel X-750			
4	闸板架 Disc frame	WCB	A216-WCB	WCB	A216-WCB
5	阀座 Seat	25+STL	A105+STL	1Cr18Ni9+STL	A276-304+STL
6	阀杆 Stem	2Cr13	A276-410	1Cr18Ni9	A276-304
7	垫片 Gasket	柔性石墨+1Cr18Ni9 Graphite+1Cr18Ni9	柔性石墨+304 Graphite+304	柔性石墨+1Cr18Ni9 Graphite+1Cr18Ni9	柔性石墨+304 Graphite+304
8	螺柱 Stud	35CrMoA	A193-B7	35CrMoA	A193-B7
9	螺母 Nut	35	A194-2H	35	A194-2H
10	阀盖 Bonnet	WCB	A216-WCB	WCB	A216-WCB
11	上密封座 Back seat	1Cr13	A276-410	1Cr18Ni9	A276-304
12	填料 Packing	柔性石墨 Graphite			
13	填料压套 Packing press-sleeve	2Cr13	A276-420	2Cr13	A276-420
14	填料压盖 Packing gland	WCB	A276-WCB	WCB	A216-WCB
15	支架 Yoke	WCB	A216-WCB	WCB	A216-WCB
16	阀杆螺母 Stem nut	ZQA19-4	C95500	ZQA19-4	C95500
17	压盖 Gland	25	A105	25	A105
18	手轮 Hand wheel	QT400-17	A536-60-40-18	QT400-17	A536-60-40-18
19	指示罩 Indicating cover	25	A105	25	A105

注：阀门主要零部件材质可根据实际工况条件或用户特殊要求设计选用。
Notes: The major parts of the valves can be designed and selected according to actual work condition or customers' specific requirement.

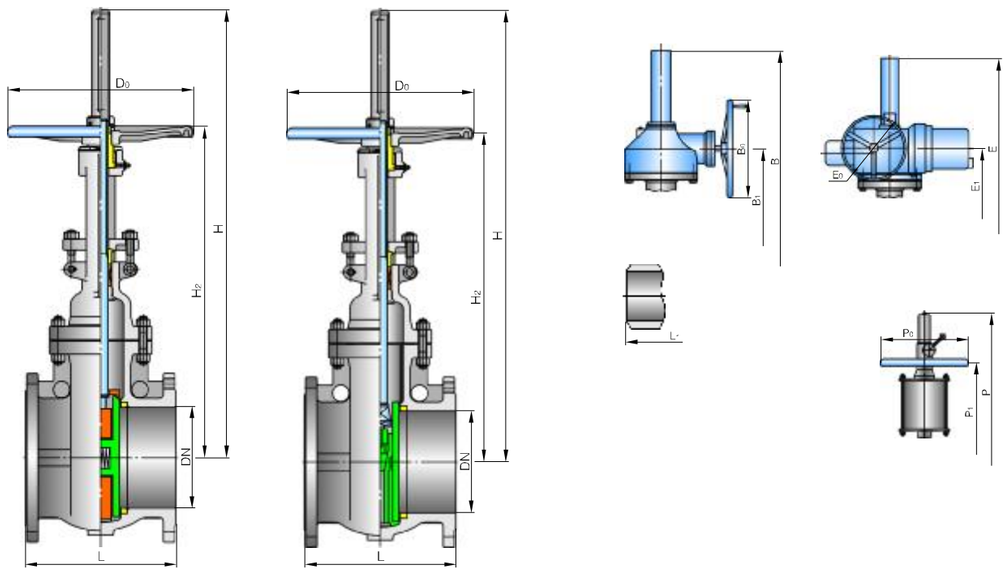

●主要外形尺寸 Main Size of Outside

型号 Model：(K)Z5(6、9)4(6)4W(F、Y、D)　　PN1.6、2.5MPa　PN2.0MPa　　API 6D Class150

DN (mm)	NPS (in)	法兰Flange L GB	法兰Flange L API	对焊 Butt welding L1	手 动 Hand-operated H	H2	D0	齿 动 Geared driving B	B1	B0	齿动装置 Geared driving	气动 液动 Air-operating and Fluid driving P	P1	P0	电 动 Electric driving device E	E1	E0	电动装置 Electric driving device
50	2	250	178	216	475	360	250	–	–	–	–	–	–	–	690	572	200	SMC-04
65	2½	280	190	241	535	425	300	–	–	–	–	–	–	–	747	637	200	SMC-04
80	3	310	203	283	600	460	300	–	–	–	–	1075	820	250	812	672	200	SMC-04
100	4	350	229	305	700	535	350	–	–	–	–	1240	945	250	960	795	508	SMC-03
150	6	450	267	403	910	685	350	–	–	–	–	1400	1065	300	1170	945	508	SMC-03
200	8	550	292	419	1095	815	350	1235	900	310	BA-0	1595	1210	300	1355	1075	508	SMC-03
250	10	650	330	457	1370	965	450	1510	1050	310	BA-0	1800	1370	350	1630	1095	305	SMC-00
300	12	750	356	502	1470	1100	500	1610	1185	310	BA-0	2090	1590	350	1730	1230	305	SMC-00
350	14	850	381	572	1730	1250	600	1890	1345	460	BA-1	2420	1845	350	2020	1417	305	SMC-00
400	16	950	406	610	1870	1375	650	2030	1470	460	BA-1	2615	1995	400	2160	1532	305	SMC-00
450	18	1050	432	660	2185	1485	700	2415	1625	460	BA-2	2895	2205	500	2500	1651	305	SMC-1
500	20	1150	457	711	2335	1575	800	2565	1715	460	BA-2	3160	2405	600	2650	1741	305	SMC-1
600	24	1350	508	813	2815	1995	1000	3045	2135	460	BA-2	3885	2955	650	3130	2161	457	SMC-2
700	28	1450	610	914	–	–	–	–	–	–	–	4065	3090	700	3630	2470	457	SMC-2
800	32	1650	660	965	–	–	–	–	–	–	–	–	–	–	4135	2933	610	SMC-3
900	36	1880	813	1016	–	–	–	–	–	–	–	+	+	+	4605	3260	610	SMC-3

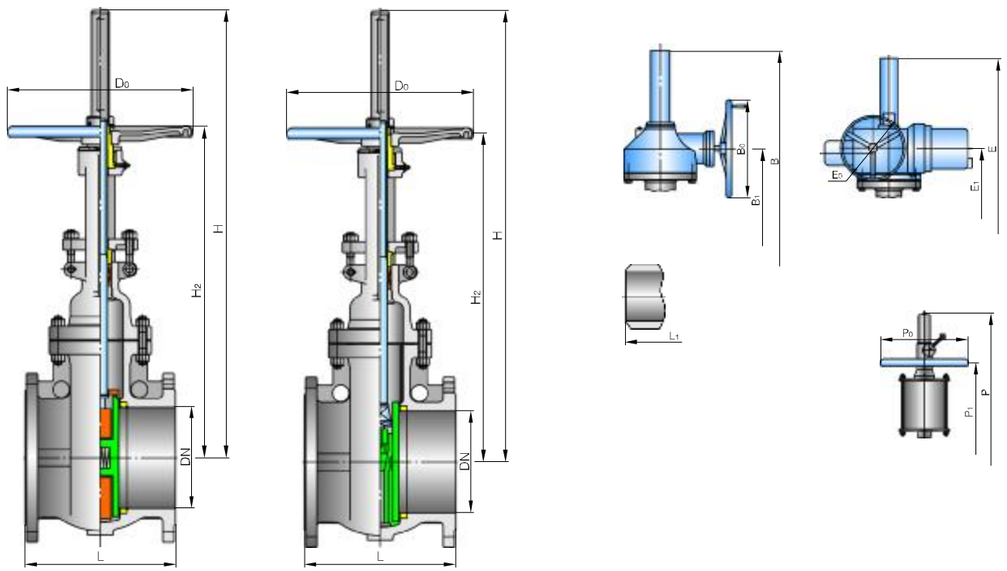

●主要外形尺寸 Main Size of Outside

型号 Model：(K)Z5(6、9)4(6)4W(F、Y、D)　　PN4.0MPa　PN5.0MPa　　API 6D Class300

DN (mm)	NPS (in)	法兰Flange L GB	法兰Flange L API	对焊 Butt welding L1	手 动 Hand-operated H	H2	D0	齿 动 Geared driving B	B1	B0	齿动装置 Geared driving	气动 液动 Air-operating and Fluid driving P	P1	P0	电 动 Electric driving device E	E1	E0	电动装置 Electric driving device
50	2	250	216	216	475	360	250	–	–	–	–	–	–	–	690	572	200	SMC-04
65	2½	280	241	241	535	425	300	–	–	–	–	–	–	–	747	637	200	SMC-04
80	3	310	283	283	600	460	300	–	–	–	–	1075	820	250	860	720	500	SMC-03
100	4	350	305	305	700	535	350	–	–	–	–	1240	945	250	960	795	500	SMC-03
150	6	450	403	403	910	685	350	–	–	–	–	1400	1065	300	1170	945	500	SMC-03
200	8	550	419	419	1095	815	350	1235	900	310	BA-0	1595	1210	300	1355	945	305	SMC-00
250	10	650	457	457	1370	965	450	1510	1050	310	BA-0	1800	1370	350	1630	1095	305	SMC-00
300	12	750	502	502	1470	1100	500	1610	1185	310	BA-0	2090	1590	350	1760	1257	305	SMC-0
350	14	850	762	762	1730	1250	600	1890	1345	460	BA-1	2420	1845	350	2020	1407	305	SMC-0
400	16	950	838	838	1870	1375	650	2030	1470	460	BA-1	2615	1995	400	2185	1541	305	SMC-1
450	18	1050	914	914	2185	1485	700	2415	1625	460	BA-2	2895	2205	500	2500	1651	305	SMC-1
500	20	1150	991	991	2335	1575	800	2565	1715	460	BA-2	3160	2405	600	2695	1757	457	SMC-2
600	24	1350	1143	1143	2815	1995	1000	3045	2135	460	BA-2	3885	2955	650	3175	2177	457	SMC-2
700	28	1450	1346	1346	–	–	–	–	–	–	–	4065	3090	700	3670	2606	610	SMC-3
800	32	1650	1524	1524	–	–	–	–	–	–	–	–	–	–	4136	2933	610	SMC-3
900	36	1880	1727	1727	–	–	–	–	–	–	–	+	+	+	4673	3317	610	SMC-4

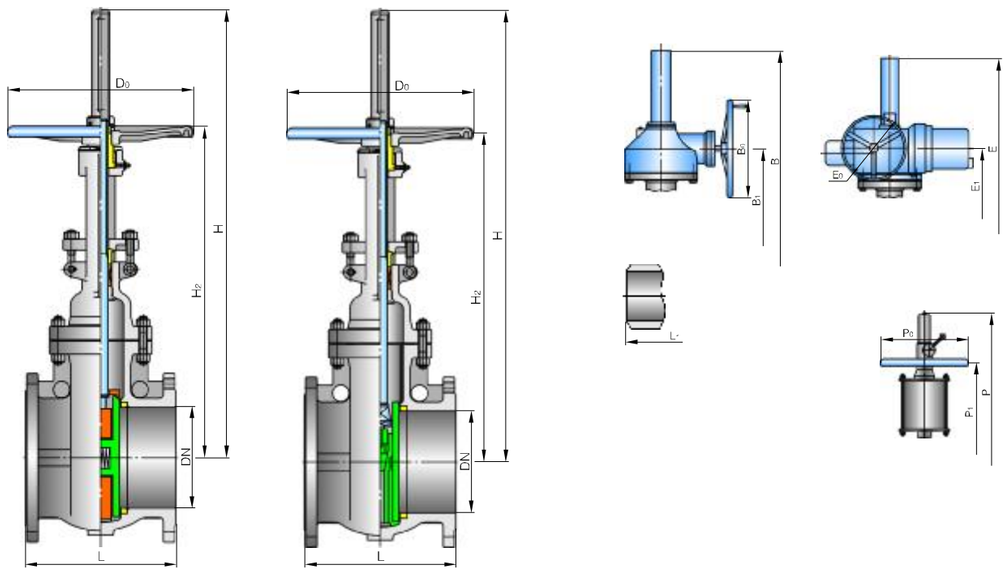

●主要外形尺寸 Main Size of Outside

型号 Model：(K)Z5(6、9)4(6)4W(F、Y、D)　　PN6.4MPa

DN (mm)	NPS (in)	法兰 Flange	对焊 Butt welding	手 动 Hand-operated			齿 动 Geared driving			齿动装置 Geared driving	气动 液动 Air-operating and Fluid driving			电 动 Electric driving device			电动装置 Electric driving device
		L	L1	H	H2	D0	B	B1	B0		P	P1	P0	E	E1	E0	
50	2	250	292	499	378	250	–	–	–	–	–	–	–	723	601	200	SMC-04
65	2½	280	330	562	446	300	–	–	–	–	–	–	–	785	670	200	SMC-04
80	3	310	356	630	483	300	–	–	–	–	1130	861	250	902	756	508	SMC-03
100	4	350	406	735	562	350	–	–	–	–	1302	992	250	1007	838	508	SMC-03
150	6	450	495	956	720	350	1096	805	305	BA-0	1470	1118	300	1216	848	305	SMC-00
200	8	550	597	1150	856	400	1290	941	305	BA-0	1675	1271	300	1440	1013	305	SMC-0
250	10	650	673	1439	1013	500	1580	1098	305	BA-0	1890	1440	350	1728	1170	305	SMC-0
300	12	750	762	1545	1155	600	1705	1250	458	BA-1	2195	1670	350	1833	1312	305	SMC-0
350	14	850	826	1817	1313	650	1977	1408	458	BA-1	2542	1937	350	2131	1480	305	SMC-1
400	16	950	902	1965	1445	700	2125	1540	458	BA-1	2746	2095	400	2278	1610	305	SMC-1
450	18	1050	978	2295	1560	800	2525	1700	458	BA-2	3040	2315	500	2655	1741	457	SMC-2
500	20	1150	1054	2452	1655	1000	2682	1795	458	BA-2	3318	2525	600	2812	1836	610	SMC-3
600	24	1350	1232	–	–	–	3186	2235	458	BA-2	4080	3103	650	3356	2413	610	SMC-3
700	28	1450	1397	–	–	–	–	–	–	–	4268	3245	700	3902	2777	610	SMC-4
800	32	1650	1651	–	–	–	–	–	–	–	–	–	–	4393	3121	610	SMC-4
900	36	1880	1880	–	–	–	–	–	–	–	–	–	–	4863	3428	760	SMC-5

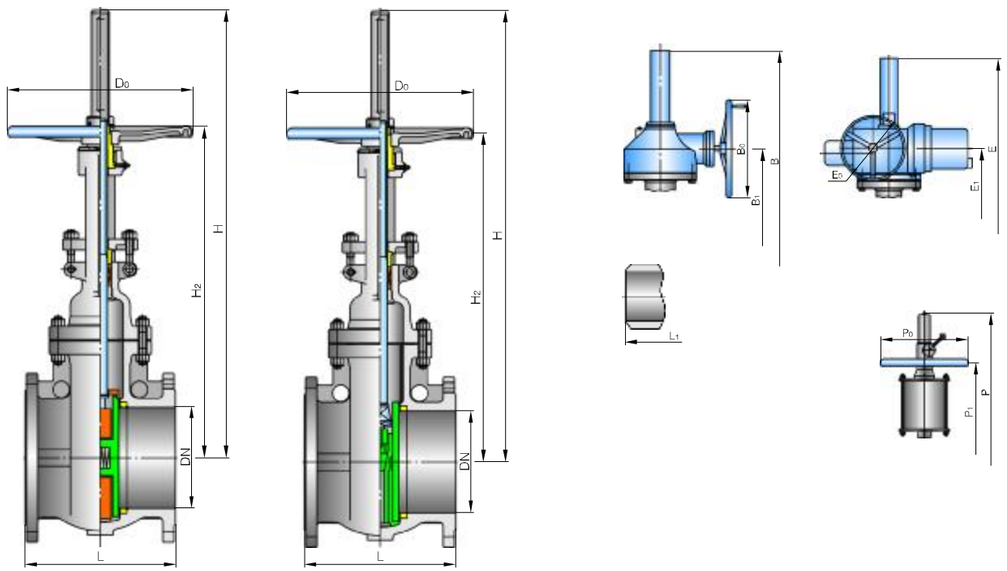

●主要外形尺寸 Main Size of Outside

型号 Model：(K)Z5(6、9)4(6)4W(F、Y、D)　　API 6D Class400

DN (mm)	NPS (in)	法兰 Flange	对焊 Butt welding	手 动 Hand-operated			齿 动 Geared driving			齿动装置 Geared driving	气动 液动 Air-operating and Fluid driving			电 动 Electric driving device			电动装置 Electric driving device
		L	L1	H	H2	D0	B	B1	B0		P	P1	P0	E	E1	E0	
50	2	292	292	499	378	250	–	–	–	–	–	–	–	723	601	200	SMC-04
65	2½	330	330	562	446	300	–	–	–	–	–	–	–	785	670	200	SMC-04
80	3	356	356	630	483	300	–	–	–	–	1130	861	250	902	756	508	SMC-03
100	4	406	406	735	562	350	–	–	–	–	1302	992	250	1007	838	508	SMC-03
150	6	495	495	956	720	350	1096	805	305	BA-0	1470	1118	300	1216	848	305	SMC-00
200	8	597	597	1150	856	400	1290	941	305	BA-0	1675	1271	300	1440	1013	305	SMC-0
250	10	673	673	1439	1013	500	1580	1098	305	BA-0	1890	1440	350	1728	1170	305	SMC-0
300	12	762	762	1545	1155	600	1705	1250	458	BA-1	2195	1670	350	1833	1312	305	SMC-0
350	14	826	826	1817	1313	650	1977	1408	458	BA-1	2542	1937	350	2131	1480	305	SMC-1
400	16	902	902	1965	1445	700	2125	1540	458	BA-1	2746	2095	400	2278	1610	305	SMC-1
450	18	978	978	2295	1560	800	2525	1700	458	BA-2	3040	2315	500	2655	1741	457	SMC-2
500	20	1054	1054	2452	1655	1000	2682	1795	458	BA-2	3318	2525	600	2812	1836	610	SMC-3
600	24	1232	1232	–	–	–	3186	2235	458	BA-2	4080	3103	650	3356	2413	610	SMC-3
700	28	1397	1397	–	–	–	–	–	–	–	4268	3245	700	3902	2777	610	SMC-4
800	32	1650	1650	–	–	–	–	–	–	–	–	–	–	4393	3121	610	SMC-4
900	36	1880	1880	–	–	–	–	–	–	–	–	–	–	4863	3428	760	SMC-5

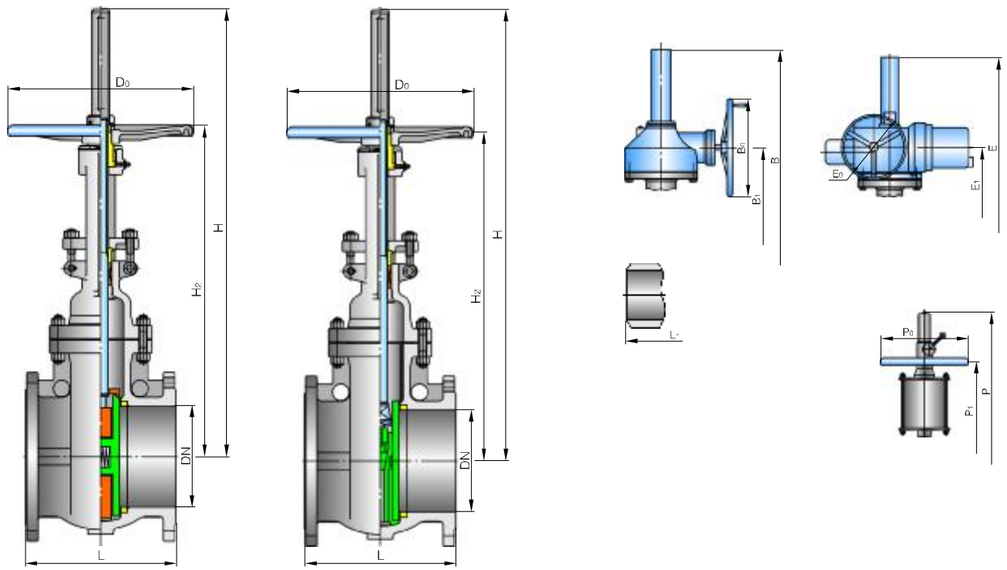

●主要外形尺寸 Main Size of Outside

型号 Model：(K)Z5(6、9)4(6)4W(F、Y、D)　　PN10.0MPa　　API 6D Class600

DN (mm)	NPS (in)	法兰 Flange	对焊 Butt welding	手 动 Hand-operated			齿 动 Geared driving			齿动装置 Geared driving	气动 液动 Air-operating and Fluid driving			电 动 Electric driving device			电动装置 Electric driving device
		L	L_1	H	H_2	D_0	B	B_1	B_0		P	P_1	P_0	E	E_1	E_0	
50	2	292	292	499	378	300	–	–	–	–	–	–	–	723	600	200	SMC-04
65	2½	330	330	562	446	350	–	–	–	–	–	–	–	821	705	508	SMC-03
80	3	356	356	630	483	350	–	–	–	–	1130	861	250	890	742	508	SMC-03
100	4	432	432	735	562	400	–	–	–	–	1302	992	250	995	690	305	SMC-00
150	6	559	559	956	720	500	1096	805	305	BA-0	1470	1118	300	1245	876	305	SMC-0
200	8	660	660	1150	856	600	1290	941	305	BA-0	1675	1271	300	1440	1013	305	SMC-0
250	10	787	787	1439	1013	650	1580	1098	458	BA-1	1890	1440	350	1753	1199	305	SMC-1
300	12	838	838	1545	1155	700	1705	1250	458	BA-1	2195	1670	350	1858	1321	305	SMC-1
350	14	889	889	1817	1313	800	1977	1408	458	BA-1	2542	1937	350	2177	1495	457	SMC-2
400	16	991	991	1965	1445	1000	2125	1540	458	BA-2	2746	2095	400	2365	1762	610	SMC-3
450	18	1092	1092	–	–	–	2525	1700	458	BA-2	3040	2315	500	2695	1877	610	SMC-3
500	20	1194	1194	–	–	–	2682	1795	458	BA-2	3318	2525	600	2922	2030	610	SMC-4
600	24	1397	1397	–	–	–	–	–	–	–	4080	3103	650	3426	2470	610	SMC-4
700	28	1549	1549	–	–	–	–	–	–	–	4268	3245	700	3983	2835	760	SMC-5
800	32	1778	1778	–	–	–	–	–	–	–	–	–	–	4485	3186	760	SMC-5

●型号编制说明 Model schedule illustration

□ □ □ □ □ □ □ □ — □ □

- 阀体材料代号 Body material code
- 压力等级代号 Pressure grade code
- 密封面材质代号 Sealing formation code
- 结构特点代号 Structure manner code
- 结构形式代号 Design feature code
- 连接形式代号 Connecting type code
- 驱动方式代号 Driving manner code
- 阀门类型代号 Valve type code
- 特殊要求代号 Special requirement code
- 系列代号 Series code

● 系列代号：本公司系列代号为FY
Series code: The series code of our company is FY

● 特殊要求代号：K—抗硫型
Special requirement code: K—Antisulphur model

● 阀门类型代号：Z—闸阀
Valve type code: Z—Gate valve

● 驱动方式代号：4—正齿轮传动　5—伞齿轮传动　9—电动　9_B—防爆电动(手轮传动略)
Driving manner code: 4—Spur gear transmission　5—Bevel gear transmission　9—Electric driving
9_B—Explosion electric driving (Hand wheel driving omitted)

● 连接形式代号：4—法兰连接　6—对焊连接
Connecting type code: 4—The flange joining　6—To welding joining

● 结构形式代号：7—暗杆平行式单闸板
Design feature code:7—Dark pole parallel single-disc

● 结构特点代号：W—无导流孔(有导流孔省略)
Structure manner code: W—Non-diversion hole type (Diversion hole type omitted)

● 密封面材质代号：F—增强聚四氟乙烯
Sealing formation code: F—Intensified polytetrafluoroethylene(PTFE)

● 压力等级代号：公称压力为MPa的10倍、磅级为实际数
Pressure grade code: The 10 times of the nominal pressure MPa, pound grade io practical number

● 阀体材料代号：C—WCB　P—CF8、ZG1Cr18Ni9Ti　R—CF8M、ZG1Cr18Ni12Mo2Ti
Body material code: C—WCB　P—CF8、ZG1Cr18Ni9Ti　R—CF8M、ZG1Cr18Ni12Mo2Ti

例1：FYZ47F-10C

注释：公称压力为1.0MPa、正齿轮传动、法兰连接、有导流孔、暗杆平行式单闸板闸阀，阀体材质为WCB，密封面材质为增强聚四氟乙烯。

Example1: FYZ47F-10C

Note: PN=1.0Mpa, spur gear actuated, flange connected inside stem parallel type single-disc gate valve with flow guide hole, the body material is WCB and the sealing face material is reinforced PTFE.

例2：FY(K)Z67F-16C

注释：公称压力为1.6MPa、手动、对焊连接、有导流孔、抗硫暗杆平行式单闸板闸阀，阀体材质为WCB，密封面材质为增强聚四氟乙烯。

Example2: FY(K)Z67F-16C

Note: PN=1.6Mpa, manually actuated, butt-weld connected, sulphur resisting inside stem parallel type single-disc gate valve with flow guide hole, the body material is WCB and the sealing face material is reinforced PTFE.

●产品结构特点 Products Design Features

● 阀体采用铸造结构。

The body uses a cast structure.

● 阀座采用O形密封圈密封和施加预紧力的浮动阀座结构，使阀门进出口双向密封；并且该结构的启闭力矩仅为普通阀门的1/2，能达到轻松开、关阀门。

The seat ring uses the floating seat ring structure with o-seal ring sealed and pre-tightening force applied to have inlet and outlet dual-way sealed; and the open-close moment with this structure is 1/2 that of the common valves only, able to lightly open and close valves.

● 阀座采用密封面上镶嵌PTFE，具有PTFE对金属和金属对金属的双重密封，PTFE密封面同时清除闸板脏物的作用。

The seat ring uses the sealing face inlaid with PTFE, so has dual seals of PTFE to metal and metal to metal, the PTFE sealing face also acts as removing the dirt on the wedge disc.

● 阀门的闸板，无论是全开或是全关始终与密封面吻合，密封面得到保护不受介质直接冲刷，从而延长使用寿命。

The wedge disc of the valve is always fitted with the sealing face whether in full open or full close status to have the sealing face protected without being directly eroded by the medium so as to extend the duration.

● 阀门在全开时，通道平滑为直线，流阻系数极小，无压力损失，可通毛球清扫管线。

When fully opened, the valve's channel is smooth and linear, with an extremely small flow resisting coefficient and no pressure loss, and the pipeline can be cleaned with hair-ball through it.

● 阀门关闭时能自动卸掉内腔高压(详见工作原理图)，保证使用安全。

Automatic removal of the high pressure in the internal cavity when the valve is about to close(see the working principle diagram for the details) so as to ensure safety.

● 采用封闭齿轮转动启闭指示机构，能长期清晰地反映阀门的启闭情况。

Use a sealed gear-driving open-close indicating mechanism, which is able to clearly show the open-close condition of the valve in a long term.

● 直埋式阀门外表面采用环氧煤沥青防腐处理，能与管线同寿命。

The external surface of the directly built-in valve is corrosion resisting treated with epoxy coal bitumen and can be the same duration as the pipeline.

●产品性能规范 Products Performance Specification

压力等级 Pressure		常温试验压力(MPa) Testing pressure at constant temperature (Mpa)				适用温度 Applicable temperature	适用介质 Applicable medium	
		壳体试验 The shell testing	左密封 The left sealing	右密封 Right sealing	低压气密封 Low pressure air tightness		普通型 Ordinary type	抗硫型 Antisulphur type
公称压力(MPa) Nominal rating pressure (PN)	1.6	2.4	1.76	1.76	0.6	-29～121℃ 或按用户要求 -29～121℃ or upon the user requirement	石油、天然气、水等非腐蚀性介质 Petroleum, natural gas, water etc. non-corrosive media	含H_2S、CO_2的石油、天然气、水等腐蚀性介质 Petroleum, natural gas, water etc, containing H_2S, Co_2 corrosive media
	2.5	3.75	2.75	2.75	0.6			
	4.0	6.0	4.4	4.4	0.6			
	6.4	9.6	7.04	7.04	0.6			
磅级(Lb) Pound grade (Class)	150	3.0	2.2	2.2	0.6			
	300	7.5	5.5	5.5	0.6			

●工作原理 Working Principle

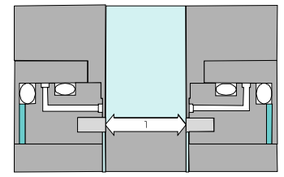

图(1)

1、阀门内部压力相当时(1)，闸板处于闭合状态，阀座表面PTFE密封环形成初始密封，每次阀门开或关时，阀座圈能清洁闸板两侧。(如图1)

With equal pressure throughout the valve(and the gate in closed position), and initial seal (1) is formed with the raised PTFE ring on the faces of the seats. (The seat-inserts clean both sides of the gate each time the valve is opened or closed)

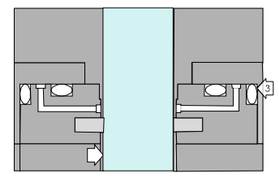

图(2)

2、对阀门施加管道压力时(2)，压力作用于闸板，迫使它贴近出口阀座上的PTFE环，压缩它直到闸板停在钢制阀座上，这样，就形成了双重密封，首先是PTFE对金属密封，然后是金属对金属密封，阀座也被牢固地推到凹槽，在这一点(3)，O形圈阻止任何后部介质流。(如图2)

As line pressure (2) is applied to the valve. it acts on the gate, forcing it against the PTFE ring on the downstream seat, compressing it until the seat against the steel seat. Thus, a double seal is formed...first, a PTFE-to-metal seal; then, metal-to-metal. The seat is also forced firmly into its recess. The O-ring (3) prevents any downstream flow at this point.

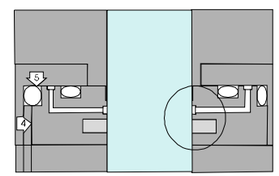

图(3)

3、阀腔压力泄放后，形成进口密封，管道压力作用于进口阀座(4)，使其移向闸板，这时形成PTFE对金属的密封，同时，O形圈(5)与阀座凹槽形成紧密的密封。(如图3)

Upstream seal is provided when valve cavity pressure is bled off. This is caused by the force of line pressure acting against the upstream seat (4) moving the seat against the gate and providing a tight PTFE-to metal seal at this point. At the same time. the O-ring (5) forms a tight seal with the seat recess.

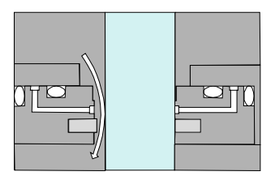

图(4)

4、阀门自动泄放多余的压力，当阀腔压力大于管道压力时，由于热膨胀，进口阀座推向凹槽，阀腔内多余的压力在阀座与闸板之间泄放到管道中。(如图4)

Valve automatically relieves itself of excessive valve cavity pressure. When valve cavity pressure exceeds line pressure...from such causes as thermal expansion...the upstream seat is forced back into its recess and the excess pressure in the valve cavity is bled between the seat and the gate into the line.

●产品主要参数 Main Parameter of the Products

基本型号 Serial models	FYZ47F、FYZ67F、FYZ447F、FYZ467F、FYZ547F、FYZ567F、FYZ9B47F、FYZ9B67F		
压力等级范围 Pressure grade range	PN0.6～6.4MPa (Class150～900)		
通径范围 Drift diameter range	DN25～1000mm(1"～40")		
驱动方式 Driving manner	手轮驱动 Hand wheel driving		齿轮动、气动、液动、电动 Gear driving, air-operating, hydrodynamic driving and electric driving
适用范围 Scope of application	Class150～300 (PN1.6～4.0)	Class400 (PN6.4)	Class150～900
	1"～40" (DN25～1000mm)	1"～28" (DN25～700mm)	1"～40" (DN25～1000mm)

注：本公司可根据用户要求提供产品。
Note: Our company can provide products at customres'request.

●产品采用标准 Technical Specification

设计依据 Design reference		GB	API
设计标准 Design standard		JB/T5298 GB/T19672	API 6D ASME B16.34
结构长度 Structural length	法兰连接 Flanged ends	GB/T 12221 GB/T19672 JB/T 5298	API 6D ASME B16.10
	焊 接 Welded connection	GB/T15188.1 GB/T19672	
连接法兰 Flanged ends		GB/T9113 JB/T 79	ASME B16.5 MSS SP44
对焊端 Butt-welding ends		GB/T 12224	ASME B16.25
试验和检验 Test & inspection		JB/T 9092	API 6D API 598

注：阀门可根据用户要求设计制造。
Note: valve can be designed according to customer's requirement.

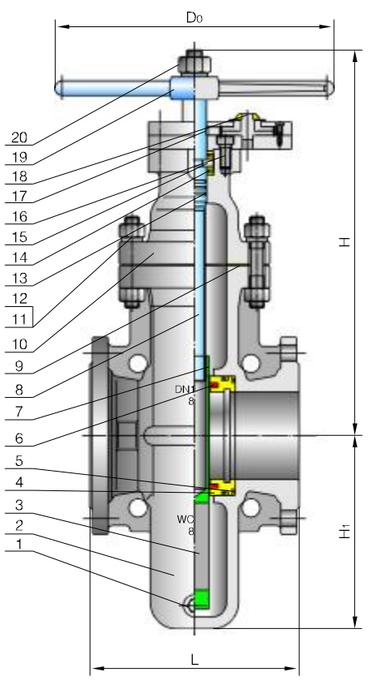

●主要零件材料 Major Parts Material Form

序号 No.	零件名称 Accessory name	材 料 Material GB
1	排污堵头 Blow down stopple	25
2	阀体 Body	WCB
3	闸板 Gate disc	16Mn+ENP
4	阀座 Seat	16Mn
5	O形圈 O-Ring	FPM
6	密封圈 Sealing ring	PTFE
7	阀杆螺母 Valve stem nut	ZQAL9-4
8	阀杆 Stem	1Cr13
9	垫片 Packing	柔性石墨+1Cr18Ni9 Graphite+1Cr18Ni9
10	阀盖 Bonnet	WCB
11	双头螺柱 Stud	35CrMo
12	螺母 Nut	45
13	O形圈 O-Ring	FPM
14	轴承 Bearing	组件 Package
15	对开环 To the ring of holding	45
16	内六角螺钉 Six angle screws inside	35
17	键 Key	45
18	开关指示器 Switch indicator	PTFE+1Cr18Ni9
19	手轮 Hand wheel	Q235A
20	螺母 Nut	35

●产品采用标准Technical Specification

设计依据 Design reference		GB	API
设计标准 Design standard		JB/T5298 GB/T19672	API 6D ASME B16.34
结构长度 Structural length	法兰连接 Flanged ends	GB/T 12221 GB/T19672 JB/T 5298	API 6D ASME B16.10
	焊 接 Welded connection	GB/T15188.1 GB/T19672	
连接法兰 Flanged ends		GB/T9113 JB/T 79	ASME B16.5 MSS SP44
对焊端 Butt-welding ends		GB/T 12224	ASME B16.25
试验和检验 Test & inspection		JB/T 9092	API 6D API 598

注：阀门可根据用户要求设计制造。
Note: valve can be designed according to customer's requirement.

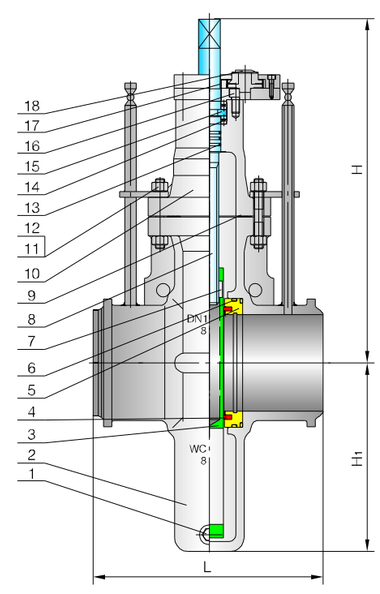

●主要零件材料 Major Parts Material Form

序号 No.	零件名称 Accessory name	材 料 Material GB
1	排污堵头 Blow down stopple	25
2	阀体 Body	WCB
3	闸板 Gate disc	16Mn+ENP
4	阀座 Seat	16Mn
5	O形圈 O-Ring	FPM
6	密封圈 Sealing ring	PTFE
7	阀杆螺母 Valve stem nut	ZQAL9-4
8	阀杆 Stem	1Cr13
9	垫片 Packing	柔性石墨+1Cr18Ni9 Graphite+1Cr18Ni9
10	阀盖 Bonnet	WCB
11	双头螺柱 Stud	35CrMo
12	螺母 Nut	45
13	O形圈 O-Ring	FPM
14	轴承 Bearing	组件 Package
15	对开环 To the ring of holding	45
16	内六角螺钉 Six angle screws inside	35
17	键 Key	45
18	开关指示器 Switch indicator	PTFE+1Cr18Ni9

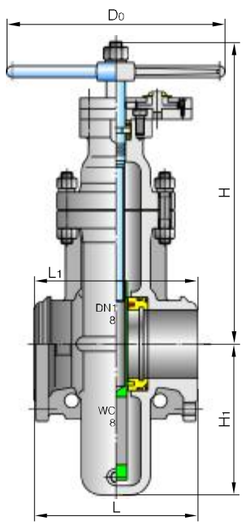

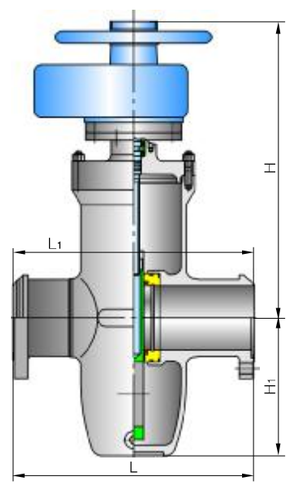

●主要外形尺寸 Main Size of Outside

型号 Model：(K)Z4(5、9B)4(6)7F　　PN0.4、0.6、1.0、1.6、2.5MPa　PN2.0MPa　　API 6D Class150

DN (mm)	NPS (in)	法兰 Flange	对焊 Butt welding	手 动 Hand-operated			齿 动 Geared driving			齿动装置 Geared driving	电 动 Electric driving device			电动装置 Electric driving device
		L	L_1	H_1	H	D_0	H_1	H	D_0		H_1	H	D_0	
25	1	165	–	85	228	180	–	–	–	–	–	–	–	–
32	1¼	165	–	103	231	180	–	–	–	–	–	–	–	–
40	1½	178	–	115	240	250	–	–	–	–	–	–	–	–
50	2	178	216	130	255	250	–	–	–	–	–	–	–	–
65	2½	190	241	160	355	300	–	–	–	–	–	–	–	–
80	3	203	283	180	360	300	–	–	–	–	–	–	–	–
100	4	229	305	214	400	300	–	–	–	–	–	–	–	–
125	5	254	381	257	460	350	–	–	–	–	–	–	–	–
150	6	267	403	300	500	350	–	–	–	–	–	–	–	–
200	8	292	419	388	570	350	–	–	–	–	–	–	–	–
250	10	330	457	475	680	400	475	700	350	0型	475	710	500	SMC-03
300	12	356	502	547	750	450	547	870	350	0型	547	880	305	SMC-00
350	14	381	572	625	875	450	625	995	450	1型	625	1015	305	SMC-00
400	16	406	610	712	1000	500	712	1120	450	1型	712	1130	305	SMC-00
450	18	432	660	785	1130	500	785	1280	450	1型	785	1360	305	SMC-0
500	20	457	711	880	1200	600	880	1350	450	1型	880	1430	305	SMC-0
600	24	508	813	1045	1420	800	1045	1570	500	2型	1045	1650	305	SMC-1
700	28	610	914	1190	1650	800	1190	1800	500	2型	1190	1910	305	SMC-1
800	32	660	914	1360	1880	1000	1360	2040	500	2型	1360	2140	305	SMC-1
900	36	771	1016	1510	2100	1000	1510	2280	600	3型	1510	2390	458	SMC-2
1000	40	811	–	1715	2300	1200	1715	2480	600	3型	1715	2590	458	SMC-2

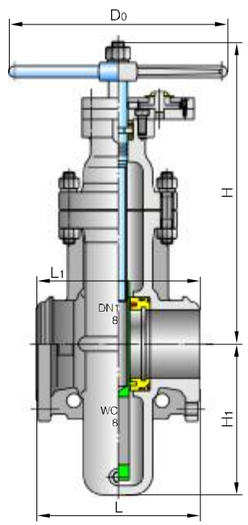

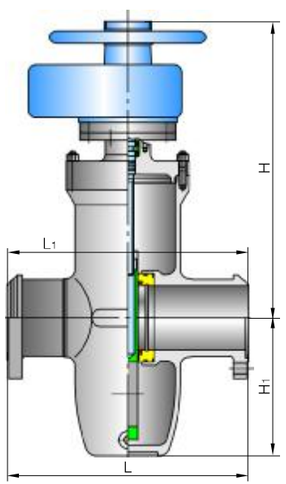

●主要外形尺寸 Main Size of Outside

型号 Model：(K)Z4(5、9B)4(6)7F　　PN4.0MPa　PN5.0MPa　　API 6D Class300

DN (mm)	NPS (in)	法兰 Flange L		对焊 Butt welding	手 动 Hand-operated			齿 动 Geared driving			齿动装置 Geared driving	电 动 Electric driving device			电动装置 Electric driving device
		GB	API	L_1	H_1	H	D_0	H_1	H	D_0		H_1	H	D_0	
25	1	165	165	165	85	238	180	–	–	–	–	–	–	–	–
32	1¼	178	178	178	103	238	180	–	–	–	–	–	–	–	–
40	1½	190	190	190	115	245	250	–	–	–	–	–	–	–	–
50	2	216	216	216	130	265	250	–	–	–	–	–	–	–	–
65	2½	241	241	241	160	365	300	–	–	–	–	–	–	–	–
80	3	283	283	283	180	375	300	–	–	–	–	–	–	–	–
100	4	305	305	305	214	420	300	–	–	–	–	–	–	–	–
125	5	381	381	381	257	480	350	–	–	–	–	–	–	–	–
150	6	403	403	403	300	540	350	–	–	–	–	–	–	–	–
200	8	419	419	419	388	610	350	388	710	350	0型	388	720	305	SMC-00
250	10	457	457	457	475	710	400	475	820	350	0型	475	830	305	SMC-00
300	12	502	502	502	547	810	450	547	900	450	1型	547	910	305	SMC-0
350	14	572	762	762	625	920	450	625	1015	450	1型	625	1095	305	SMC-0
400	16	610	838	838	712	1120	550	712	1150	450	1型	712	1230	305	SMC-0
450	18	660	914	914	785	1230	700	785	1300	500	2型	785	1400	305	SMC-1
500	20	711	991	991	880	1310	800	880	1370	500	2型	880	1470	305	SMC-1
600	24	787	1143	1143	1045	1520	1000	1045	1620	600	3型	1045	1730	305	SMC-1

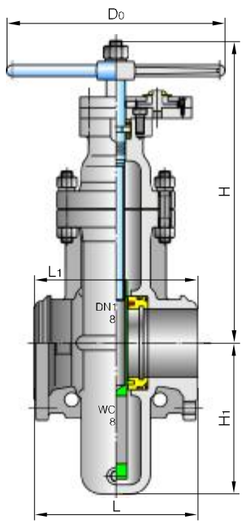

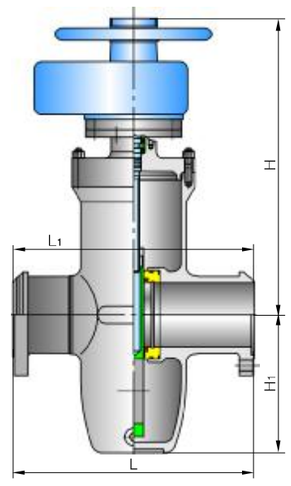

●主要外形尺寸 Main Size of Outside

型号 Model：(K)Z4(5、9B)4(6)7F　　PN6.4MPa　　API 6D Class400

DN (mm)	NPS (in)	法兰 Flange	对焊 Butt welding	手 动 Hand-operated			齿 动 Geared driving			齿动装置 Geared driving	电 动 Electric driving device			电动装置 Electric driving device
		L	L1	H1	H	D0	H1	H	D0		H1	H	D0	
50	2	216	250	158	265	300	–	–	–	–	–	–	–	–
65	2½	241	280	190	365	300	–	–	–	–	–	–	–	–
80	3	283	310	225	375	350	–	–	–	–	–	–	–	–
100	4	305	350	255	420	350	–	–	–	–	–	–	–	–
125	5	381	400	275	480	400	–	–	–	–	–	–	–	–
150	6	403	450	330	540	400	–	–	–	–	–	–	–	–
200	8	419	550	410	610	500	388	710	350	0型	388	720	305	SMC-0
250	10	457	650	490	710	500	475	820	350	0型	475	830	305	SMC-0
300	12	502	750	570	810	600	547	900	450	1型	547	910	305	SMC-0
350	14	762	850	625	920	600	625	1015	450	1型	625	1095	305	SMC-1
400	16	838	950	735	1120	700	712	1150	450	1型	712	1230	305	SMC-1

●安装示意图 Install the Sketch Map

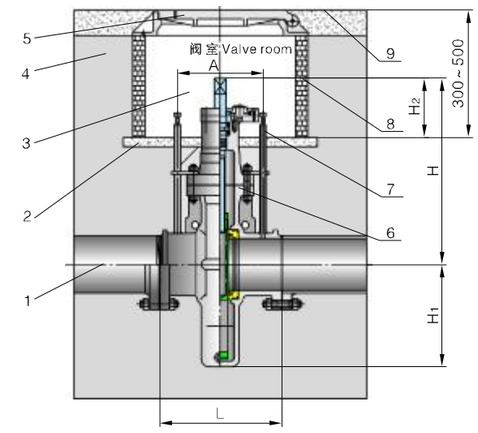

1、埋地管线 Underground pipeline
2、水泥浇注面 Cement poured surface
3、阀室 Valve room
4、埋地介质 Underground medium
5、阀室盖 Bonnet room
6、阀门 Valve
7、放散管 Place scattered pipes
8、砖墙 Brick wall
9、路面 Pavement

●主要外形尺寸 Main Size of Outside

DN(mm)	尺寸 Dimensions (mm)					
	L		H	H1	H2	A
	对焊 Butt welding	法兰 Flange				
100	305	350	420	214	140	225
150	403	450	540	300	150	300
200	419	450	600	388	150	320
250	457	457	700	475	150	360
300	502	500	800	547	160	400
350	572	550	900	625	180	470
400	610	600	1100	712	180	500
500	711	700	1300	880	180	570
600	813	800	1500	1045	200	670
700	914	900	1700	1190	200	770

卓越品质 • 成就方圆

Excellent quality makes
Fangyuan a great achievement

球阀系列

Ball valve series

锻钢固定式球阀

锻钢固定式球阀

锻钢固定式球阀

锻钢固定式球阀

浮动式球阀

锻钢固定式球阀

全焊式球阀

浮动式球阀

焊接式球阀

FYV

焊接式球阀

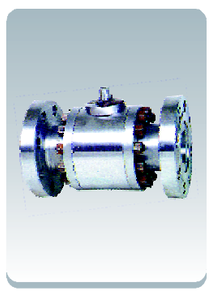

锻钢浮动式球阀

全焊式球阀

固定式球阀

型号编制说明 Model schedule illustration

□ □ Q □ □ □ □ — □ □

- 阀体材料代号 Body material code
- 压力等级代号 Pressure grade code
- 密封面材质代号 Sealing formation code
- 结构形式代号 Design feature code
- 连接形式代号 Connecting type code
- 驱动方式代号 Driving manner code
- 阀门类型代号 Valve type code
- 特殊要求代号 Special requirement code
- 系列代号 Series code

- 系列代号：本公司系列代号为FY
  Series code : The series code of our company is FY
- 特殊要求代号：K—抗硫型　D—低温型　EX—加长杆型　M—埋地型
  Special requirement code: K—Antisulphur type　D—Low temperature type　EX—Pole extending type　M—Ground burying type
- 阀门类型代号：Q—球阀
  Valve type code: Q—Ball valve
- 驱动方式代号：3—蜗轮蜗杆传动　6—气动　7—液动　8—气-液联动　9—电动　9_B—防爆电动
  Driving manner code: 3—Worm wheel and screw trensmission　6—Air driving　7—Hydrodynamic driving
  8—Air-hydro operated　9—Electric driving　9_B—Explosion electric driving
- 连接形式代号：1—内螺纹连接　2—外螺纹连接　4—法兰连接　6—对焊连接　7—对夹连接　8—卡箍连接
  Connecting type code: 1—The interior whorl joining　2—The other whorl joining　4—The flange joining
  6—To welding joining　7—To inserting joining　8—The caliper joining
- 结构形式代号：1—直通浮动式　4—浮动式L型三通　5—浮动式T型三通　7—直通固定式　8—固定式T型三通　9—固定式L型三通
  Design feature code: 1—Direct floating type　4—Floating type three direct links of Model L　5—Floating type three direct links of Model T
  7—Direct regular type　8—Regular type Model T three direct links　9—Regular type Model L three direct links
- 密封面材质代号：Y—硬质合金　F—增强聚四氟乙烯　N—尼龙　PPL—对位聚苯
  Sealing formation code: Y—Hard alloy　F—Strengthen the polytetrafluoroethylene (PTFE)　N—Nylon　PPL—Counterpoint polyphenyl
- 压力等级代号：公称压力为MPa的10倍、磅级为实际数
  Pressure grade code: The 10 times of the nominal pressure MPa, pound grade io practical number
- 阀体材料代号：C—WCB　I—WC6、ZG1Cr5Mo　V—WC9、ZG20CrMoV　P—CF8、ZG1Cr18Ni9Ti
  R—CF8M、ZG1Cr18Ni12Mo2Ti　S—CF3　L—CF3M　F—LCB　N—LC3
  Body material code: C—WCB　I—WC6、ZG1Cr5Mo　V—WC9、ZG20CrMoV　P—CF8、ZG1Cr18Ni9Ti
  R—CF8M、ZG1Cr18Ni12Mo2Ti　S—CF3　L—CF3M　F—LCB　N—LC3

注：PN≥2.5MPa及压力等级大于Class150的碳素钢阀体，省略本代号。

Note: this code is omitted with the carbon steel body of PN≥2.5Mpa and the pressure class >Class150.

采用标准 Standards

美标浮动式球阀 API Floating Ball Valve
设计制造 Design and Manufacture: API 6D、ASME B16.34(BS5351)、API 608、MSS-SP-72
结构长度 Face to Face Dimension: ASME B16.10、API 6D
法兰连接 Flange Connection Dimension: ASME B16.5
对焊端 BW Connection Dimension: ASME B16.25
检验和试验 Test and Inspection: API 598、API 6D
防火结构设计 Fire-safe Design: API 607

国标浮动式球阀 GB Floating Ball Valve
设计制造 Design and Manufacture: GB/T19672、GB/T12237
结构长度 Face to Face Dimension: GB/T12221、GB/T19672
法兰连接 Flange Connection Dimension: JB/T79、GB/T9113、HG20592
检验和试验 Test and Inspection: JB/T9092
防火结构设计 Fire-safe Design: JB/T6899

浮动式球阀的结构设计特点 Costruction and Features of Floating Ball Valve

用途 Application

浮动式球阀适用于Class150～Class1500、PN16～PN100的各种管路上，用于截断或接通管路中的介质，选用不同的材质，可分别适用于水、蒸汽、油品、液化气、天然气、煤气、硝酸、醋酸、氧化性介质、尿素等多种介质。驱动方式为手动、蜗轮蜗杆传动、气动或电动。浮动式球阀一般采用法兰连接，也可采用对焊连接。

Floating ball valves are suitable for use on various kinds of pipelines of Class 150 to Class 1500, PN16 to PN100 to turn on or off the pipeline medium, of which the operation types include manual, worm gear and pneumatic or electric actuators.

阀座的可靠密封 Reliable Seat Seal

浮动式球阀采用弹性密封圈结构设计。当介质压力较小时，密封圈与球体接触面积较小，在密封圈与球体接触形成较大的密封比压，确保可靠密封。当介质压力较大时，随着密封圈的弹性变形，密封圈与球体的接触面积增大，故密封圈能承受较大的介质推力而不会损坏。

The structure design of elastic sealing ring has been adopted for floating ball valves. This seat design features a bigger sealing pressure ratio between the ring surface and the ball when medium pressure gets lower, where the contacting area is smaller. Thus, the reliable seal is ensured. When the medium pressure gets higher, the contacting area between seat ring and ball becomes bigger as the sealing ring transforms elastically to undertake the bigger force pushed by the medium without any damage.

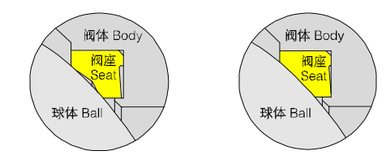

介质压力较小时 At lower medium pressure　介质压力较大时 At higher medium pressure

防火结构设计 Fire Safe Design

在阀门的使用现场发生火灾时，当聚四氟乙烯等非金属材料制作的阀座密封圈、阀杆上密封垫、阀杆密封填料以及中法兰密封垫片在高温下分解或破坏后，球阀能够借助于特别设计的金属对金属辅助密封结构，有效地控制阀门的内漏和外漏。对于用户有防火要求的浮动式球阀，我们公司的防火设计均符合API 607、API 6Fa、BS 6755及JB/T 6899等标准规范的要求。

With the valve heated in a fire application the non-metal material parts such as seat sealing ring of PTFE, stem back seat gasket, gland packing, and the sealing gasket between body and bonnet might disintegrate or be damaged due to high temperature. specially designed structure of auxiliary metal to metal seal is provided to effectively prevent both internal and external leakage of the valve. As required by customers, floating ball valves with fire safe design can meet the requirement of API 607, API 6FA, BS6755 and JB/T 6899.

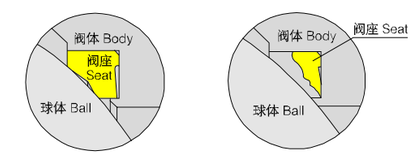

火烧前 Before fire　火烧后 After fire

阀座的防火结构设计 Fire safe design of seat

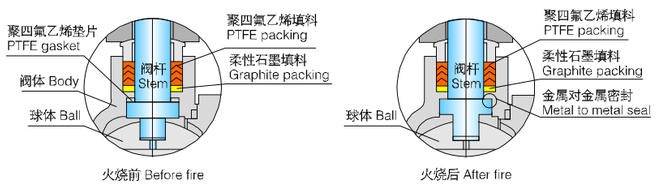

阀杆的防火结构设计
Fire safe design of stem

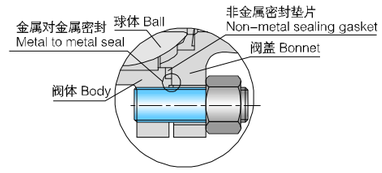

中法兰密封的防火结构设计
Fire safe design of valve body and bonnet flanges

阀杆的可靠密封 Reliable Stem Seal

阀杆采用防吹出结构设计，即使在阀腔异常升压以及填料压板失效等极端情况下，也能保证阀杆不会被介质吹出。阀杆采用有倒密封的下装式结构设计，倒密封的密封力随着介质压力的增高而增大，故能在各种压力下均能确保阀杆的可靠密封。

The blow-out proof design has been adopted for the stem to ensure that even if the pressure in the body cavity is risen acc-idently and the packing flange becomes invalid, the stem may not be blown out by medium. The stem features the design with a backseat, being assembled from underneath. The sealing force against the backseat gets higher as the medium pressure becomes higher. So the reliable seal of the stem can be assured under variable medium pressure.

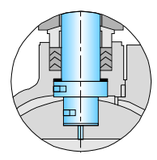

下装式阀杆不会被介质压力吹出
Stem assembled from underneath may not be blown out by medium

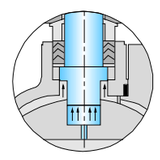

上装式阀杆有被介质压力吹出的可能
Stem assembled downward may be blown out

阀杆采用V型填料密封结构，V型填料能将填料压盖的压紧力及介质力有效地转化成阀杆的密封力。

V type packing structure has been employed to effectively trans form the pushing force of the gland flange and the medium pressure into the sealing force against the stem.

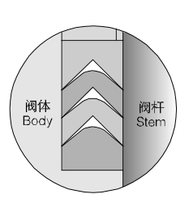

填料压紧前
Packing before pressed

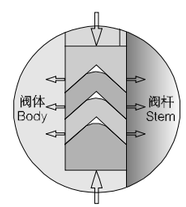

填料压紧后
Packing after pressed

将传统的填料压盖改进为填料压板与填料压套的两体式结构设计，填料压套与填料压板采用球形接触，确保填料压套始终垂直，并在填料压套内部设置了聚四氟乙烯衬套，避免了阀杆与填料压套的擦伤与磨损，并减小了阀门的操作力矩。

The traditional packing flange design has been improved to be of two piece structure i.e., being as a gland flange and gland, the latter contacts the gland flange with spherical surface. Thus, the gland remains vertical always, and is lined internally with a PTFE bush to prevent the galling against and friction between thestem, which can also reduce the operation torque of the valve.

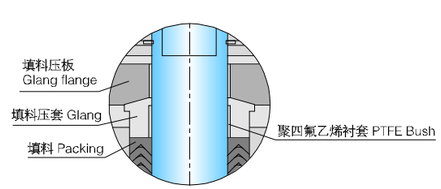

防止阀杆使用中的磨损
Stem galling prevented in application

根据用户的需要，可以采用蝶形弹簧加载的填料压紧机构，使阀杆填料的密封更加可靠。

Based on customers' requirement, a packing tightening design may be employed to obtain more reliable stem packing seal, which is loaded by beve-lling spring.

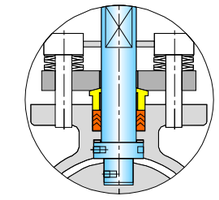

防静电结构 Anti-static Feature

根据用户要求，球阀可以设有防静电结构。采用弹簧—柱塞式静电引出装置，使球体与阀体之间直接形成静电通道 (对于DN≤25的球阀)或通过阀杆使球体与阀体之间形成静电通道(对于DN≥32的球阀)。从而可将球体与阀座开关过程中摩擦产生的静电通过阀体引到大地，防止静电火花可能引起的火灾或爆炸等危险。

The traditional packing flange design has been improved to be of two piece structure, i.e., being as a packing flange plate and a follower, the latter contacts the flange plate with spherical surface. Thus, the follower remains vertical always, and is lined internally with a PTFE bush to prevent the galling against and friction between the stem, which can also reduce the operation torque of the valve.

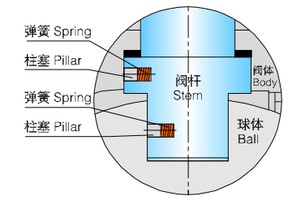

DN≥32的球阀防静电结构设计
Anti-Static design
for ball valve ≥32mm

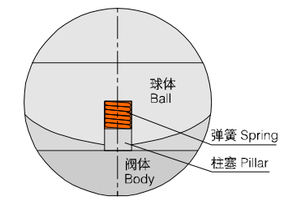

DN≤25的球阀防静电结构设计
Anti-Static design
for ball valve ≤25mm

防止误操作 Wrong Operation Prevention

设置了带锁孔的90° 开关定位片，根据需要可以加锁，防止误操作。阀杆头部安装手柄的部位采用扁形设计，当阀门开启时，手柄与管道平行，当阀门关闭时，手柄与管道垂直，能够确保阀门的开关指示不会发生错误。

To prevent the ball valve from wrong operation the key lock with 90° of open and close positioning pad has been provided, which can be lockable as required. At the stem head, where the lever fixes, a flat is so designed that the valve opens with the lever in parallel to piping, and with the lever right-angled to the piping, the valve is closed. So it is ensured that the valve indicator of open and close can never make mistake.

驱动装置安装平台的设置 Mounting Pad Provided

我们公司的浮动式球阀均设置了安装驱动装置的支架平台，通过驱动装置支架，可以方便的安装蜗轮蜗杆传动装置、气动装置或电动装置。

Our company has provided for floating ball valve with a mounting pad, through which it is easy to fix the actuators, such as worm gear, pneumatic and electric actuators.

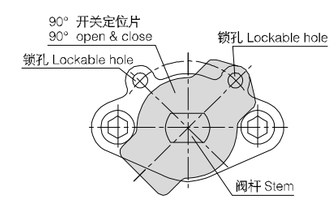

浮动式球阀的操作扭矩 Operation Torque of Floating Ball Valve

表中软密封浮动式球阀的操作扭矩是基于常温、清洁介质计算的，在选择驱动装置时，建议驱装置的驱动扭矩至少是阀门操作扭矩的1.3倍以上。对于高温、低温工况及非清洁的介质，会导致阀门操作扭矩的增大，在驱动装置的选用时应给予充分的考虑。金属硬密封浮动式球阀的操作扭矩大约为软密封浮动式球阀操作扭矩的4倍。

The operation torque data of soft sealed floating ball valve in the following table are calculated based on normal temperature and clean medium. As selecting actuator, it is suggested that drive torque of actuator be more than 1.3 times the operation torque of ball valve at least. In case of high temperature and low temperature working conditions or unclean medium, it is possible that valve operation torque gets increased, which should be taken into full consideration as selecting actuators. Operation torque for metal to metal sealed trunnion ball valve is about 4 times that of soft sealed floating ball valve.

NPS	DN	软密封浮动式球阀的操作扭矩 Operation torque of soft sealed floating ball valve N.m									
		Class150 PN20	Class300 PN50	Class600 PN110	Class900 PN150	Class1500 PN260	PN16	PN25	PN40	PN63	PN100
1/2	15	7	10	17	25	35	6	8	10	15	17
3/4	20	10	16	24	35	50	9	12	15	20	24
1	25	16	25	40	65	100	14	18	23	35	40
1 1/4	32	24	35	60	100	150	22	28	32	50	60
1 1/2	40	35	50	90	120	180	32	40	45	70	90
2	50	50	70	110	180	270	40	55	65	85	110
2 1/2	65	80	100	165	–	–	60	85	95	130	165
3	80	120	160	300	–	–	90	130	150	200	300
4	100	180	280	600	–	–	130	190	260	340	600
5	125	280	600	–	–	–	250	320	550	–	–
6	150	540	1000	–	–	–	490	620	900	–	–
8	200	960	2100	–	–	–	860	1100	1800	–	–
10	250	1800	–	–	–	–	–	–	–	–	–

浮动式球阀典型结构及零部件组成 Typical Drawing of Floating Ball Valve and Parts Composition

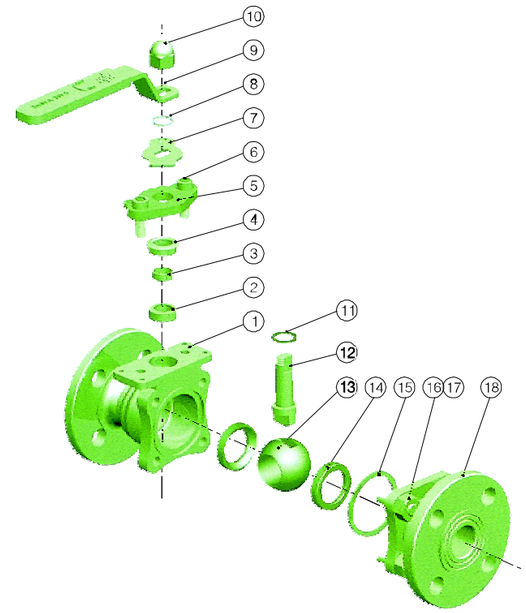

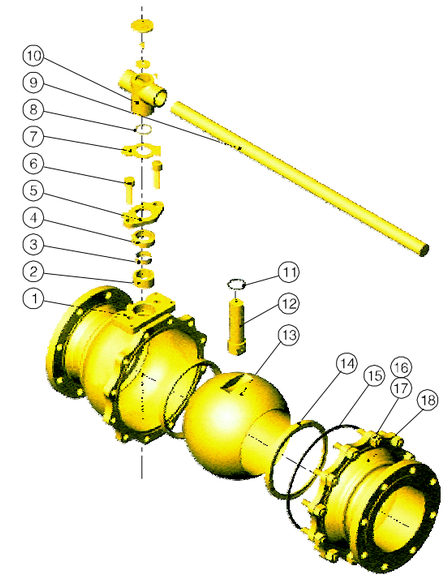

主要零件名称及材料 Parts and Material List

序号 Parts No.	零件名称 Parts name	材料 Materials				
		WCB/A105+HCr(ENP)	WCB/304	WCB/316	CF8	CF8M
1	阀体 Body	ASTM A216 WCB	ASTM A216 WCB	ASTM A216 WCB	ASTM A351 CF8	ASTM A351 CF8M
2	填料 Packing	PTFE	PTFE	PTFE	PTFE	PTFE
3	衬套 Stem bearing	PTFE	PTFE	PTFE	PTFE	PTFE
4	填料压套 Gland	ASTM A182 F6a	ASTM A182 F304	ASTM A182 F316	ASTM A182 F304	ASTM A182 F304
5	填料压板 Gland flange	ASTM A216 WCB	ASTM A216 WCB	ASTM A216 WCB	ASTM A351 CF8	ASTM A351 CF8M
6	螺钉 Gland bolt	ASTM A193 B7	ASTM A193 B7	ASTM A193 B7	ASTM A193 B8	ASTM A193 B8M
7	定位片 Stop collar	碳钢 Carbon steel	碳钢 Carbon steel	碳钢 Carbon steel	不锈钢 Stainless steel	不锈钢 Stainless steel
8	挡圈 Circlip	碳钢 Carbon steel	碳钢 Carbon steel	碳钢 Carbon steel	不锈钢 Stainless steel	不锈钢 Stainless steel
9	扳手 Lever	碳钢 Carbon steel	碳钢 Carbon steel	碳钢 Carbon steel	碳钢 Carbon steel	碳钢 Carbon steel
10	螺母 Nut or wrench head	碳钢 Carbon steel	碳钢 Carbon steel	碳钢 Carbon steel	碳钢 Carbon steel	碳钢 Carbon steel
11	上密封垫 Thrust washer	PTFE	PTFE	PTFE	PTFE	PTFE
12	阀杆 Stem	ASTM A182 F6a	ASTM A182 F304	ASTM A182 F316	ASTM A182 F304	ASTM A182 F316
13	球体 Ball	A105+HCr(ENP)	ASTM A182 F304	ASTM A182 F316	ASTM A182 F304	ASTM A182 F316
14	密封圈 Seat	Reinforced PTFE	Reinforced PTFE	Reinforced PTFE	Reinforced PTFE	Reinforced PTFE
15	垫片 Gasket	PTFE	PTFE	PTFE	PTFE	PTFE
16	螺柱 Body nut	ASTM A194 2H	ASTM A194 2H	ASTM A194 2H	ASTM A194 8	ASTM A194 8M
17	螺母 Body bolting	ASTM A193 B7	ASTM A193 B7	ASTM A193 B7	ASTM A193 B8	ASTM A193 B8M
18	阀盖 Closure	ASTM A216 WCB	ASTM A216 WCB	ASTM A216 WCB	ASTM A351 CF8	ASTM A351 CF8M

注：上表仅列出了铸钢球阀最常用零部件，根据用户要求或阀门的实际使用工况，我公司可以提供其他多种不同的零部件材料配置。
Note: The chart above only lists out some common composition of steel ball valve parts. We may provide other different parts material composition according to the customer's request or the actual valve working condition.

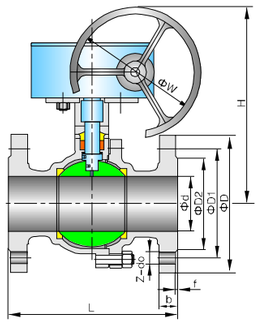

蜗轮蜗杆传动
Gear box

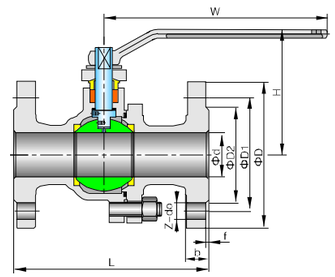

手动
Hand wheel

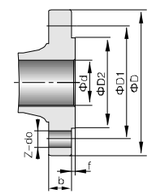

Class600~Class1500法兰
Flange

主要外形尺寸及重量 Main Size of Outside & Weight

压力级 Pressure stage	规格 Size		尺寸 Dimensions (mm)													重量 Weight(kg)	
	DN	NPS	L		d	D	D1	D2	b	f	Z-do	W		H			
			RF	RTJ								手动 Hand wheel	蜗轮 Gear bos	手动 Hand wheel	蜗轮 Gear bos	手动 Hand wheel	蜗轮 Gear bos
Class150 PN20	15	1/2	108	119	13	89	60.5	35	11.5	1.6	4-15	140	–	85	–	3	–
	20	3/4	117	130	19	98	70	43	11.5	1.6	4-15	140	–	90	–	4	–
	25	1	127	140	25	108	79.5	51	11.5	1.6	4-15	150	–	99	–	5	–
	32	1 1/4	140	153	32	117	89	64	13	1.6	4-15	180	–	105	–	7	–
	40	1 1/2	165	178	38	127	98.5	73	14.5	1.6	4-15	200	–	126	–	8	–
	50	2	178	191	51	152	120.5	92	16	1.6	4-19	250	–	140	–	12	–
	65	2 1/2	190	203	64	178	139.5	105	17.5	1.6	4-19	300	–	165	–	18	–
	80	3	203	216	76	190	152.5	127	19.5	1.6	4-19	350	–	178	–	24	–
	100	4	229	242	102	229	190.5	157	24	1.6	8-19	500	305	230	380	38	53
	125	5	356	369	127	254	216	186	24	1.6	8-22	800	305	280	405	60	79
	150	6	394	407	152	279	241.5	216	25.5	1.6	8-22	800	305	310	460	82	102
	200	8	457	470	203	343	298.5	270	29	1.6	8-22	1000	305	350	550	145	185
	250	10	533	546	254	406	362	324	31	1.6	12-25	–	400	–	706	–	280

压力级 Pressure stage	规格 Size		尺寸 Dimensions (mm)													重量 Weight(kg)	
	DN	NPS	L		d	D	D1	D2	b	f	Z-do	W		H			
			RF	RTJ								手动 Hand wheel	蜗轮 Gear bos	手动 Hand wheel	蜗轮 Gear bos	手动 Hand wheel	蜗轮 Gear bos
Class300 PN50	15	1/2	140	151	13	95	66.5	35	14.5	1.6	4-15	140	140	85	85	3	–
	20	3/4	152	165	19	117	82.5	43	16	1.6	4-19	140	140	90	90	5	–
	25	1	165	178	25	124	89	51	17.5	1.6	4-19	150	150	99	99	6	–
	32	1 1/4	178	191	32	133	98.5	64	19.5	1.6	4-19	180	180	105	105	8	–
	40	1 1/2	190	203	38	156	114.5	73	21	1.6	4-22	200	200	126	126	11	–
	50	2	216	232	51	165	127	92	22.5	1.6	8-19	250	250	142	142	16	–
	65	2 1/2	241	257	64	190	149	105	25.5	1.6	8-22	300	300	165	165	24	–
	80	3	283	299	76	210	168.5	127	29	1.6	8-22	350	350	178	178	34	52
	100	4	305	321	102	254	200	157	32	1.6	8-22	500	500	230	230	56	76
	125	5	381	397	127	279	235	186	35	1.6	8-22	800	800	280	280	86	124
	150	6	403	419	152	318	270	216	37	1.6	12-22	800	800	310	310	125	163
	200	8	502	518	203	381	330	270	41.5	1.6	12-25	1000	1000	350	350	222	267
Class600 PN110	15	1/2	165	164	13	95	66.5	35	14.5	6.4	4-15	140	–	79	–	5	–
	20	3/4	190	190	19	118	82.5	43	16	6.4	4-19	140	–	83	–	7	–
	25	1	216	216	25	124	89	51	17.5	6.4	4-19	200	–	114	–	9	–
	32	1 1/4	229	229	32	133	98.5	64	21	6.4	4-19	200	–	120	–	13	–
	40	1 1/2	241	241	38	156	114.5	73	22.5	6.4	4-22	250	–	125	–	17	–
	50	2	292	295	51	165	127	92	25.5	6.4	8-19	300	–	156	–	25	–
	65	2 1/2	330	333	64	190	149	105	29	6.4	8-22	350	–	172	–	42	–
	80	3	356	359	76	210	168	127	32	6.4	8-22	500	305	220	370	56	76
	100	4	432	435	102	273	216	157	38.5	6.4	8-25	650	305	250	400	85	123
Class900 PN150	15	1/2	216	216	13	121	82.5	35	22.5	6.4	4-23	150	–	98	–	9	–
	20	3/4	229	229	19	130	88.9	43	25.5	6.4	4-23	150	–	105	–	13	–
	25	1	254	254	25	149	101.6	51	29	6.4	4-26	200	–	110	–	16	–
	32	1 1/4	279	279	32	159	111.1	64	29	6.4	4-26	250	–	120	–	24	–
	40	1 1/2	305	305	38	178	123.8	73	32	6.4	4-29	250	–	125	–	31	–
	50	2	368	371	49	216	165.1	92	38.5	6.4	8-26	350	–	160	–	45	–
Class1500 PN260	15	1/2	216	216	13	121	82.5	35	22.5	6.4	4-23	182	–	98	–	10	–
	20	3/4	229	229	19	130	88.9	43	25.5	6.4	4-23	200	–	105	–	14	–
	25	1	254	254	25	149	101.6	51	29	6.4	4-26	250	–	110	–	17	–
	32	1 1/4	279	279	32	159	111.1	64	29	6.4	4-26	300	–	120	–	25	–
	40	1 1/2	305	305	38	178	123.8	73	32	6.4	4-29	350	–	130	–	33	–
	50	2	368	371	49	216	165.1	92	38.5	6.4	8-26	500	–	160	–	48	–

锻钢浮动式球阀 Forged Steel Floating Ball Valve

我们公司的浮动式球阀一般采用铸钢阀体，根据用户要求，也可采用锻钢阀体，锻钢球阀的法兰连接尺寸、结构长度等主要尺寸与铸钢球阀相同。

The floating ball valve manufactured by our company is generally employing casted steel valve body, however, as required by customers, forged steel valve body is also available, of which the main sizes such as flange connections and face to face dimensions are the same as that of the cast steel ball valve.

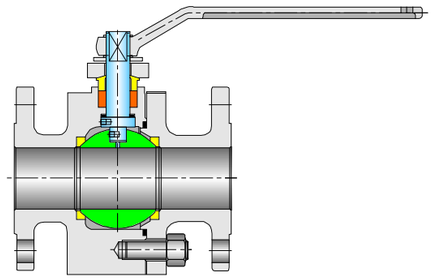

缩径浮动式球阀 Ball Valve with Reduced Bore

我们公司除了生产全通径浮动式球阀以外，还生产缩径浮动式球阀，以满足用户的不同需求。缩径球阀不仅能适当的降低成本及价格，而且能满足用户的一些特定要求。

In addition to the full bore floating ball valve, our company is also manufacturing the floating ball valve with reduced bore to satisfy different requirement of customers, which can not only lower the cost and the pricing, but also meet customers' special requirement.

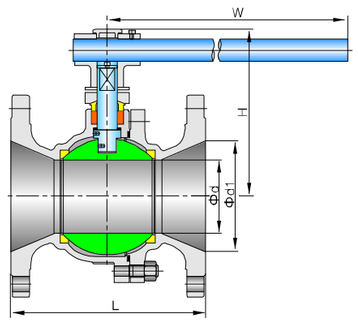

主要外形尺寸及重量 Main Size of Outside & Weight

规格 Size		Class 150, PN20						Class 300, PN50						Class 600, PN110				
DN	NPS	L 长 Long	L 短 short	d	d1	H	W	L 长 Long	L 短 short	d	d1	H	W	L	d	d1	H	W
15	1/2	108	108	10	14	80	140	140	140	10	14	80	140	165	10	14	75	140
20	3/4	117	117	14	19	85	140	152	152	14	19	85	140	190	14	19	79	140
25	1	127	127	20	25	90	140	165	165	20	25	90	140	216	20	25	83	140
32	1 1/4	140	140	25	32	99	150	178	178	25	32	99	150	229	25	32	114	150
40	1 1/2	165	165	32	38	105	180	190	190	32	38	105	180	241	32	38	120	200
50	2	178	178	38	51	126	200	216	216	38	51	126	200	292	38	51	125	250
65	2 1/2	190	190	51	64	140	250	241	241	51	64	140	250	330	51	64	156	300
80	3	203	203	64	76	165	300	283	283	64	76	165	300	356	64	76	172	350
100	4	229	229	76	102	178	350	305	305	76	102	178	350	432	76	102	220	500
125	5	356	356	102	127	230	500	381	381	102	127	230	500	508	102	127	250	650
150	6	394	267	127	152	280	800	403	403	127	152	280	800	–	–	–	–	–
200	8	457	292	152	203	310	800	502	419	152	203	310	800	–	–	–	–	–
250	10	533	330	203	254	350	1000	568	457	203	254	350	1000	–	–	–	–	–

注：1、缩径球阀的连接法兰尺寸与全通径球阀相同。
2、部分规格的缩径球阀.其结构长度有长系列和短系列。

Notes: 1. Sizes of flange connection of the ball valve with reduced bore are the same as that of full bore ball valves.
2. There are two series of face to face dimensions i.e., the long series and the short series, for some of ball valves with reduced bore.

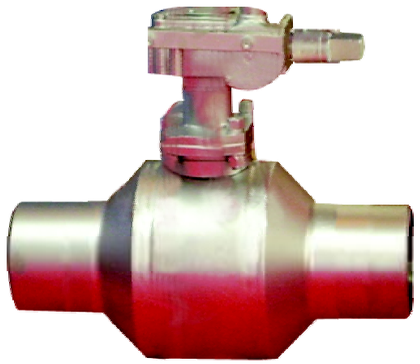

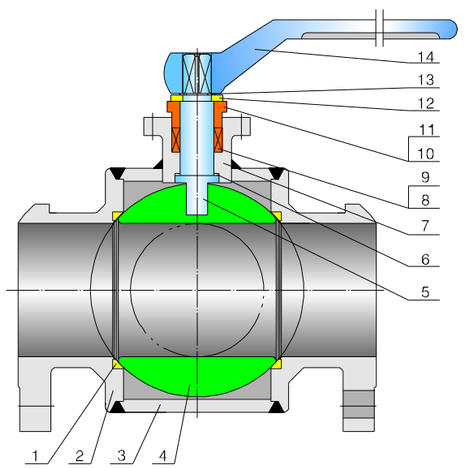

产品采用标准 Technical specification

设计依据 Design reference		GB	API	ASME
设计标准 Design standard		GB/T12237	API 6D	ASME B16.34
结构长度 Structural length	连接法兰 Flanged ends	GB/T12221	API 6D	ASME B16.10
	焊 接 Welded connection	GB/T15188.1		
连接法兰 Flanged endsr		GB/T9113 JB/T 79	ASME B16.5	
对焊端 Butt-welding ends		GB/T12224	ASME B16.25	
试验和检验 Test & inspection		JB/T 9092	API 6D	API 598

注：系列阀门连接法兰及对焊端尺寸可根据用户要求设计制造。
Notes: The sizes of serial valve connecting flange and butt-welding terminas can be designed according to customer's requirement.

主要零件材料 Major parts material form

序号 No.	零件名称 Accessory name	材 料 Material GB	材 料 Material ASTM
1	阀座 Seat	PTFE	PTFE
2	端盖 The end covering	25	A105
3	阀体 Body	25	A105
4	球体 Ball*	25+Hcr	A105+Hcr
5	阀杆 Stem**	1Cr13	A276-410
6	垫片 Gasket	PTFE	PTFE
7	填料体 Packing body	25	A105
8	填料垫 packing seat	1Cr13	A276-410
9	填料 packing	PTFE；碳纤维；柔性石墨 PTFE; Carbon fibre; Soft graphite	
10	填料压盖 Packing gland	25	A105
11	螺钉 Screw	35CrMo	A193-B7
12	定位片 Locating piece	Q235A	碳钢 Carbon steel
13	挡圈 Ring	65Mn	AISI 1566
14	手柄 Handle	KT330	A47-667Cr.32510

注：*抗硫型阀门该零件的材质为GB(1Cr18Ni9+Ni.P)、ASTM(A182-304+Ni.P)
The material of this part about the anti-sulphur type valve is GB (1Cr18Ni9+Ni.P), ASTM(A182-304+Ni.P)
**抗硫型阀门该零件的材质为GB(1Cr18Ni9)、ASTM(A276-321)
The material of this part about the anti-sulphur type valve is GB (1Cr18Ni9),ASTM(A276-321)
系列阀门主要零部件及密封面的材质可根据实际工况条件或用户特殊要求设计选用。
Major parts of the valve series and materials of sealing surface differ according to actual working condition and customer's special requirement.

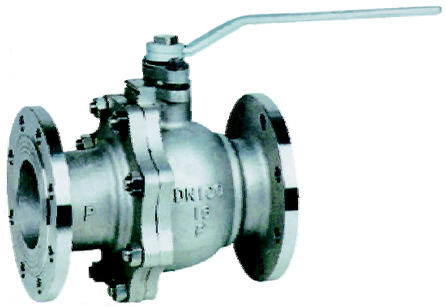

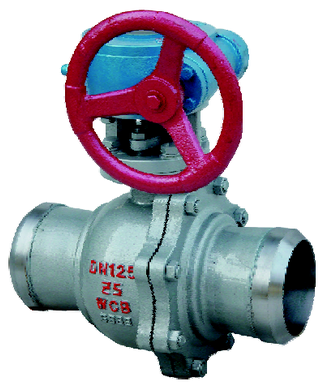

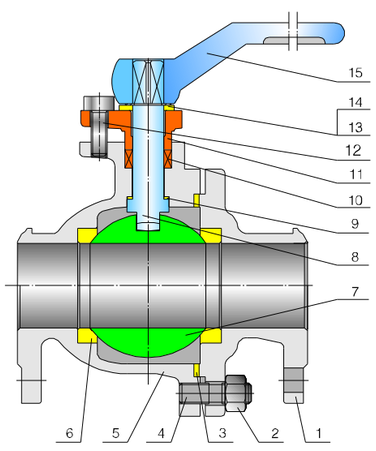

产品采用标准 Technical Specification

设计依据 Design reference	GB
设计标准 Design standard	GB/T19672、GB/T 12237
结构长度 Structural length	GB/T 12221
连接法兰 Flanged endsr	GB/T9113、JB/T 79
对焊端 Butt-welding ends	GB/T 12224
试验和检验 Test & inspection	JB/T 9092

注：阀门连接法兰及对焊端尺寸可根据用户要求设计制造。
Notes: The sizes of valve connecting flange and butt-welding terminas can be designed according to customer's requirement.

主要零件材料 Major Parts Material Form

序号 No.	零件名称 Accessory name	材 料 Material GB
1	右体 Bonnet	WCB
2	螺母 Nut	35
3	垫片 Gasket	柔性石墨+不锈钢 Graphite+stainless steel
4	螺柱 Stud	35CrMoA
5	阀体 Body	WCB
6	阀座 Seat	PTFE
7	球体 Ball*	25+HCr
8	阀杆 Stem**	1Cr13
9	垫片 Gasket	PTFE
10	填料 packing	柔性石墨 Graphite
11	填料压盖 Packing gland	WCB
12	螺钉 Screw nail	35
13	定位片 Locating piece	Q235A
14	挡圈 Ring	65Mn
15	手柄 Wrench	KT33

注：*抗硫型阀门该零件的材质为GB(1Cr18Ni9+Ni.P)、ASTM(A182-304+Ni.P)
The material of this part about the anti-sulphur type valve is GB (1Cr18Ni9+Ni.P), ASTM(A182-304+Ni.P)
**抗硫型阀门该零件的材质为GB(1Cr18Ni9)、ASTM(A276-321)
The material of this part about the anti-sulphur type valve is GB (1Cr18Ni9),ASTM(A276-321)
系列阀门主要零部件及密封面的材质可根据实际工况条件或用户特殊要求设计选用。
Major parts of the valve series and materials of sealing surface differ according to actual working condition and customer's special requirement.

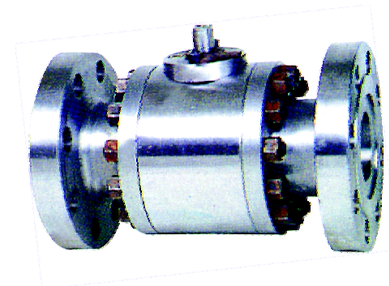

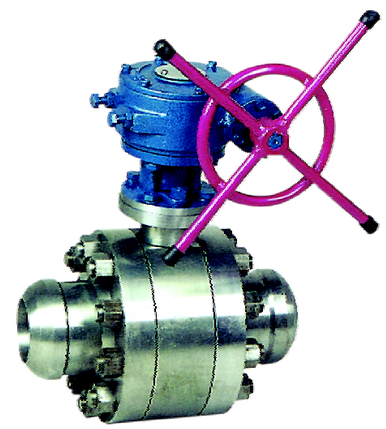

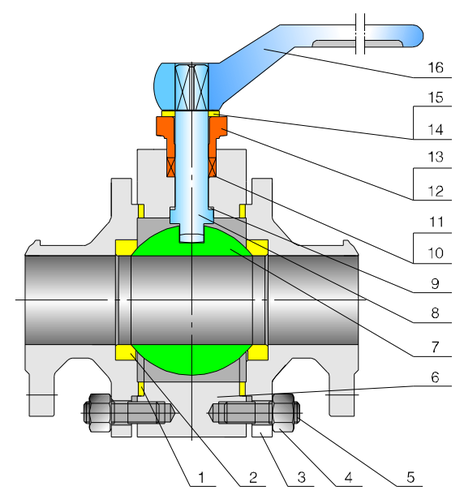

产品采用标准 Technical Specification

设计依据 Design reference	GB
设计标准 Design standard	GB/T19672、GB/T 12237
结构长度 Structural length	GB/T 12221
连接法兰 Flanged endsr	GB/T9113、JB/T 79
对焊端 Butt-welding ends	GB/T 12224
试验和检验 Test & inspection	JB/T 9092

注：阀门连接法兰及对焊端尺寸可根据用户要求设计制造。
Notes: The sizes of valve connecting flange and butt-welding terminas can be designed according to customer's requirement.

主要零件材料 Major Parts Material Form

序号 No.	零件名称 Accessory name	材 料 Material GB
1	垫片 Gasket	柔性石墨+不锈钢 Graphite+stainless steel
2	阀座 Seat	PTFE
3	右体 Bonnet	25
4	螺母 Nut	32
5	螺柱 Stud	35CrMoA
6	阀体 Body	25
7	球体 Ball*	25+HCr
8	阀杆 Stem**	1Cr13
9	垫片 Gasket	PTFE
10	填料垫 packing seat	1Cr13
11	填料 packing	柔性石墨 Graphite
12	填料压盖 Packing gland	WCB
13	螺栓 Bolt	35CrMoA
14	定位片 Locating piece	Q235A
15	挡圈 Ring	65Mn
16	手柄 Handle	KT33

注：*抗硫型阀门该零件的材质为GB(1Cr18Ni9+Ni.P)、ASTM(A182-304+Ni.P)
The material of this part about the anti-sulphur type valve is GB (1Cr18Ni9+Ni.P), ASTM(A182-304+Ni.P)
**抗硫型阀门该零件的材质为GB(1Cr18Ni9)、ASTM(A276-321)
The material of this part about the anti-sulphur type valve is GB (1Cr18Ni9),ASTM(A276-321)
系列阀门主要零部件及密封面的材质可根据实际工况条件或用户特殊要求设计选用。
Major parts of the valve series and materials of sealing surface differ according to actual working condition and customer's special requirement.

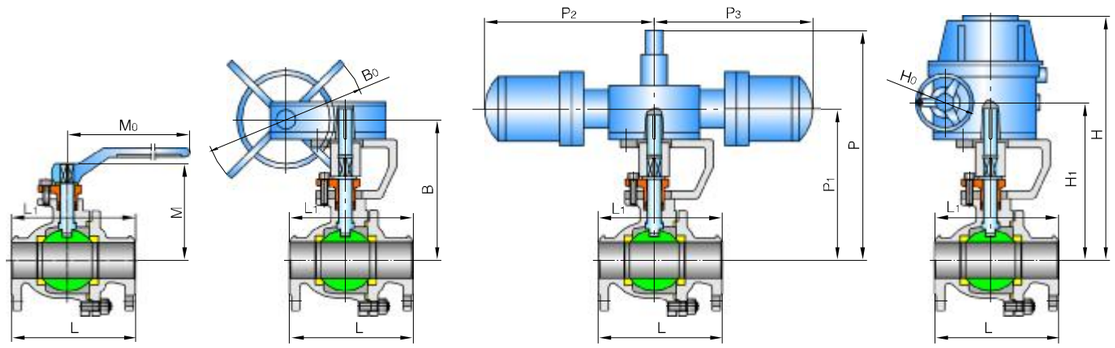

主要外形尺寸 Main Size of Outside

型号Model：(K)Q3(6、7、8、9)4(6)1F(Y、N、PPL)

压力等级 Pressure	公称通径 Nominal dimeter		法兰 Flange	对焊 Butt welding	手 动 Hand-operated		蜗轮蜗杆 Worm gear worm			气动、液动 Air-operating and Fluid driving					电 动 Electric driving			
	mm	in	L	L_1	M	M_0	B	B_0	型号	P	P_1	P_2	P_3	型号	H	H_1	H_0	型号
1.6MPa 2.5MPa	15	1/2	130	140	59	130	–	–	–	200	122	326	136	AG06	–	–	–	–
	20	3/4	140	152	63	130	–	–	–	204	126	326	136	AG09	–	–	–	–
	25	1	150	165	75	160	–	–	–	257	162	347	181	AG09	–	–	–	–
	32	1 1/4	165	178	95	230	–	–	–	245	169	420	181	AG13	–	–	–	–
	40	1 1/2	180	190.5	95	230	–	–	–	264	169	420	181	AG13	–	–	–	–
	50	2	200	216	107	230	–	–	–	340	209	426	257	AG13	472	377	190	Q60-1
	65	2 1/2	220	273	142	400	–	–	–	370	239	426	257	AG13	486	391	190	Q60-1
	80	3	250	310	152	400	–	–	–	389	258	490	257	AG13	579	484	190	Q60-1
	100	4	280	350	178	650	–	–	–	594	337	523	287	AG13	595	500	190	Q60-1
	125	5	320	400	252	1050	–	–	–	646	437	378	378	AW17	650	500	400	Q120-1
	150	6	360	457	272	1050	292	400	A	646	437	378	378	AW17	739	589	400	Q120-1
	200	8	400	521	342	1410	398	600	B	781	537	530	530	AW20	799	649	400	Q120-1

注：缩径阀门结构长度、连接法兰按不缩径规格；阀门高度、驱动装置尺寸同缩小一个规格尺寸。

Note: The face to face dimension and connecting flange of a diameter reduced valve are per the non-reducing norms; the sizes of both valve height and actuator are reduced by one norm size.

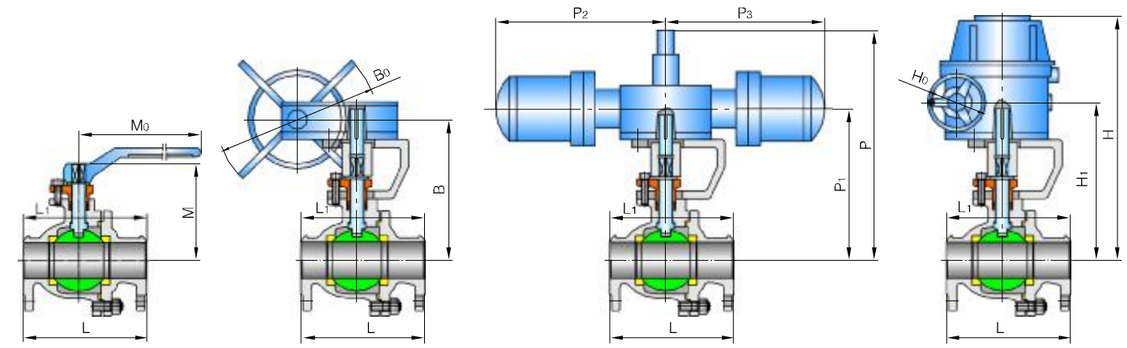

主要外形尺寸 Main Size of Outside

型号Model：(K)Q3(6、7、8、9)4(6)1F(Y、N、PPL)

压力等级 Pressure	公称通径 Nominal dimeter		法兰 Flange	对焊 Butt welding	手 动 Hand-operated		蜗轮蜗杆 Worm gear worm			气动、液动 Air-operating and Fluid driving					电 动 Electric driving			
	mm	in	L	L_1	M	M_0	B	B_0	型号	P	P_1	P_2	P_3	型号	H	H_1	H_0	型号
4.0MPa	15	1/2	130	140	59	130	–	–	–	200	122	326	136	AG06	–	–	–	–
	20	3/4	140	152	63	130	–	–	–	204	126	326	136	AG09	–	–	–	–
	25	1	150	165	75	160	–	–	–	257	162	347	181	AG09	–	–	–	–
	32	1 1/4	169	178	95	230	–	–	–	245	169	420	181	AG13	–	–	–	–
	40	1 1/2	180	190.5	95	230	–	–	–	264	169	420	181	AG13	–	–	–	–
	50	2	200	216	107	230	–	–	–	340	209	426	257	AG13	472	377	190	Q60-1
	65	2 1/2	220	241	142	400	–	–	–	379	248	426	257	AG13	486	391	190	Q60-1
	80	3	250	283	152	400	–	–	–	452	295	490	257	AG13	579	484	190	Q60-1
	100	4	280	305	178	650	–	–	–	594	375	523	287	AG13	595	500	190	Q60-1
	125	5	320	381	252	1050	–	–	–	646	437	378	378	AW17	650	500	400	Q120-1
	150	6	360	457	272	1050	292	400	A	744	500	378	378	AW17	739	589	400	Q120-1
	200	8	400	521	342	1410	398	600	B	920	615	530	530	AW20	799	649	400	Q120-1

注：缩径阀门结构长度、连接法兰按不缩径规格；阀门高度、驱动装置尺寸同缩小一个规格尺寸。

Note: The face to face dimension and connecting flange of a diameter reduced valve are per the non-reducing norms; the sizes of both valve height and actuator are reduced by one norm size.

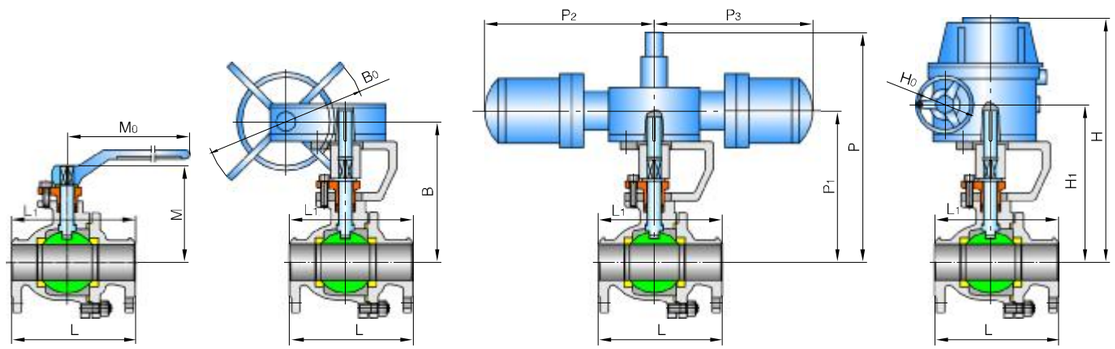

主要外形尺寸 Main Size of Outside

型号Model：(K)Q3(6、7、8、9)4(6)1F(Y、N、PPL)

压力等级 Pressure	公称通径 Nominal dimeter		法兰 Flange	对焊 Butt welding	手 动 Hand-operated		蜗轮蜗杆 Worm gear worm			气动、液动 Air-operating and Fluid driving					电 动 Electric driving			
	mm	in	L	L_1	M	M_0	B	B_0	型号	P	P_1	P_2	P_3	型号	H	H_1	H_0	型号
6.4MPa 10.0MPa	15	1/2	165	165	59	160	–	–	–	200	122	326	136	AG06	–	–	–	–
	20	3/4	190.5	190.5	63	160	–	–	–	204	126	326	136	AG09	–	–	–	–
	25	1	216	216	75	230	–	–	–	257	162	347	181	AG09	–	–	–	–
	32	1 1/4	178	178	95	230	–	–	–	245	169	420	181	AG13	–	–	–	–
	40	1 1/2	241	241	95	400	–	–	–	264	169	420	181	AG13	–	–	–	–
	50	2	292	292	167	400	–	–	–	340	209	426	257	AG13	472	377	400	Q120-1
	65	2 1/2	330	330	180	650	–	–	–	379	248	426	257	AG13	599	449	400	Q120-1
	80	3	356	356	198	650	292	400	A	452	295	490	257	AG13	599	449	400	Q120-1
	100	4	406① 432	406① 432	198	1050	398	600	B	594	375	378	378	AW17	632	472	400	Q120-1
	150	6	559	559	–	–	400	800	C	650	425	378	378	AW17	650	430	400	Q250-1
	200	8	660	660	–	–	430	800	C	680	485	530	530	AW20	710	490	400	Q250-1

注：缩径阀门结构长度、连接法兰按不缩径规格；阀门高度、驱动装置尺寸同缩小一个规格尺寸。
①406为PN6.4Mpa尺寸；432为PN10.0MPa尺寸。
Note: The face to face dimension and connecting flange of a diameter reduced valve are per the non-reducing norms; the sizes of both valve height and actuator are reduced by one norm size.
①406 to be the size of PN6.4Mpa; 432 to be the size of PN10.0MPa.

采用标准 Standards

美标固定式球阀 API Trunnion Ball Valve
设计制造 Design and Manufacture: API 6D、ASME B16.34(BS5351)、API 608、MSS-SP-72
结构长度 Face to Face Dimension: ASME B16.10、API 6D
法兰连接 Flange Connection Dimension: ASME B16.5
对焊端 BW Connection Dimension: ASME B16.25
检验和试验 Test and Inspection: API 598、API 6D
防火结构设计 Fire-safe Design: API 607

国标固定式球阀 GB Trunnion Ball Valve
设计制造 Design and Manufacture: GB/T19672、GB/T12237
结构长度 Face to Face Dimension: GB/T12221、GB/T19672
法兰连接 Flange Connection Dimension: JB/T79、GB/T9113、HG20592
检验和试验 Test and Inspection: JB/T9092
防火结构设计 Fire-safe Design: JB/T6899

固定式球阀的结构设计特点 Design Features of Trunnion Ball Valve

密封脂紧急注射装置 Urgent Grease Injection Device

根据用户要求，本公司固定式球阀可以设置密封脂紧急注射装置，对于DN150(NPS6)以上的固定式球阀，在阀杆和阀座上均装有密封脂注射装置，而对于DN125以下的固定球阀，在阀门中腔装有密封脂注射装置。当阀座密封圈或阀杆O型密封圈因意外事故损坏时，可通过密封脂注射装置注射密封脂，以防止介质通过阀座密封圈和阀杆的泄漏。

According to customers' requirement the trunnion ball valve made by our company are provided with devices for urgent grease injection, which are on both the stem and seat for the trunnion ball valves of DN>150mm(NPS6), and in the body cavity for the valve of DN<125mm. When the O ring of stem or the body seat ring is damaged due to accident, the medium leakage between body and stem can be prevented by injecting the sealing grease through the device.

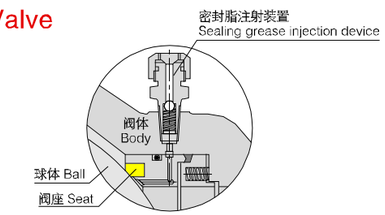

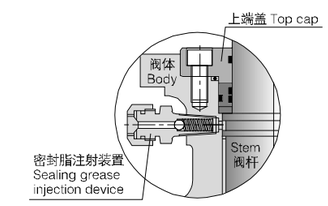

双阻断及泄放功能 Double-block and Bleed Functions

本公司固定式球阀一般采用球前阀座密封结构。固定式球阀的两个阀座能独立切断进口端和出口端的介质，实现双阻断功能。当球阀关闭时，即使阀门进出口两端同时受压，阀门中腔和两端通道也可以被相互阻断，中腔内的剩余介质可以通过泄放阀排出。

In general, our company's trunnion ball valve features the front ball sealing design structure. Each seat of the ball valve can separately cut off the medium at both inlet and outlet of the valve to realize double-block functions. When the ball valve is close, body cavity and two of the body ends can be blocked with each other even if both the inlet and outlet are under pressure, when the medium left in the body cavity might be bled through the relief valve.

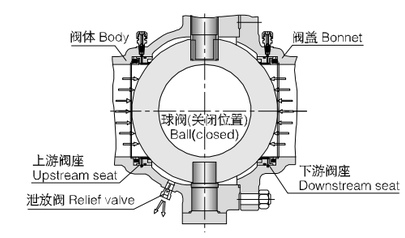

阀杆的防吹出结构设计 Blow-out proof stem

阀杆采用防吹出结构设计。下端大上端小的阀杆在上端盖和螺钉的定位下，即使在阀腔异常升压的情况下，也能够保证阀杆不会被介质吹出。

Blow-out proof structure is provited with for the stem. which is positioned by the up-end cap and screw, being guaranteed not to be blown-out by the medium even if at abnormal risen pressure in the cavity.

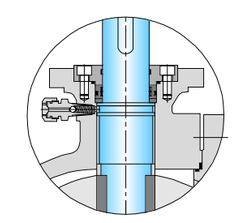

防火结构设计 Fire Safe Design

在阀门的使用现场发生火灾时，当聚四氟乙烯、橡胶等非金属材料制作的阀座密封圈、阀杆的O型密封圈以及法兰O型密封圈在高温下损坏后，本公司固定式球阀能够借住特别设计的金属对金属辅助密封结构或柔性石墨密封结构，有效地控制阀门的内漏和外漏。对于用户有防火要求的固定式球阀，本公司的防火结构设计均符合API 607, API 6Fa, BS6755 及JB/T 6899等标准规范的要求。

With the valve heated in a fire application, the non-metal material parts such as seat sealing ring of PTFE, O ring for the stem and sealing gasket for body and bonnet, might be damaged due to high temperature. Our company's special design of auxiliary metal to metal or the graphite seal is provided for the trunnion ball valve to effectively prevent both internal and external leakage of the valve. As required by customers, our company's fire safe design for the trunnion ball valve meets the requirement API 607, API 6Fa, BS6755 and JB/T 6899.

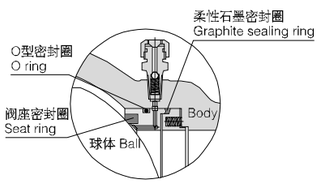

火烧前 Before fire

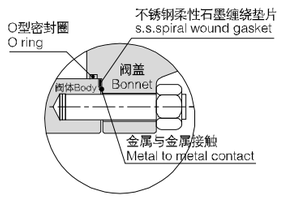

中法兰密封的防火结构设计
Fire safe design of valve body and bonnet flanges

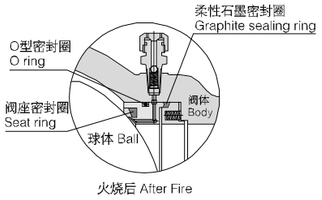

火烧后 After Fire

阀座的防火结构设计
Fire safe design of seat

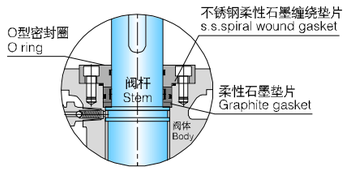

阀杆的防火结构设计
Fire safe design of stem

阀门中腔的自动泄压 Self-relief in the Body Cavity

当滞留在阀门中腔的液体介质由于温度升高而汽化，导致中腔压力异常升高时，中腔内的介质能够依靠其本身的作用力推动阀座而自动泄压，从而确保阀门的安全。

As the liquid medium left in the body cavity gasifies due to increased temperature, the pressure in the body cavity becomes abnormally higher, when the medium itself in the cavity would propel the seat and self-relieves the pressure to ensure the safety of valve.

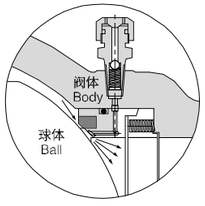

球前球后双重密封结构设计
The Bi-sealing Design Structure,i.e.Seat Sealing In Front of the Ball and Seat Sealing Behind the Ball

对于某些特定的工况要求以及用户要求，本公司的固定式球阀可以采用球前球后双重密封结构设计，即使其中一个密封副因意外情况密封失效，阀门仍然能够正常工作，从而提高了阀门的密封可靠性。

对于球前阀座，由于D1 、D2的面积差形成的活塞效应，在阀座前后的介质压差作用下，加上弹簧的预紧力使球前阀座与球体紧密接触而密封，并且密封力随着介质压差的增大而增大加。

对于球后阀座，由D2 、D3的面积差形成的活塞效应，在阀座前后的介质压差作用下，加上弹簧的预紧力使球后阀座与球体紧密接触而密封，并且密封力随着介质压差的增大而增加。

According to some special working conditions andcustomers' requirement, our company is has provided the trunnion ball valve with the Bi-sealing design structure, i.e. seat sealing in front of the ball and seat sealing behind the ball, thus the reliable sealing of the valve is ensured because the valve can perform normally even if one of the effective sealing designs becomes lost due to the abnormal condition.

Regarding the seat in front of the ball, the piston effect formed by the area difference between D1 and D2, plus the pre-tightened force of a spring would cause the seat in front of the ball by the pressure difference of the medium before and after the valve to touch the ball closely to form the tightness, of which the sealing force will become bigger as the pressure difference gets higher.

Regarding the seat after the ball, the piston effect formed by the area difference between D2 and D3, plus the pretigh-tened force of a spring would cause the seat behind the ball to touch the ball closely to form the tightness, of which the sealing force will become bigger as the pressure difference gets higher.

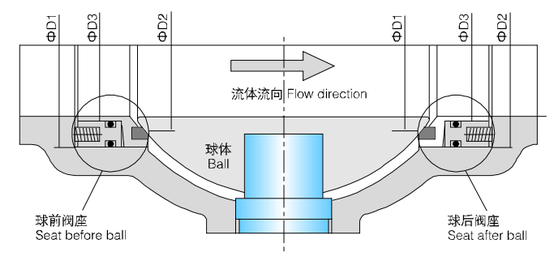

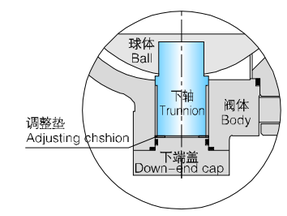

防静电结构 Anti-static Design

固定式球阀的球体通过相互间紧密接触的下轴、调整垫、下端盖，与阀体形成静电通道。从而可将球体与阀座开关过程中摩擦产生的静电通过阀体引到大地，防止静电火花可能引起的火灾或爆炸等危险。

The ball of the trunnion ball valve gets close contact with each other through the trunnion, adjusting cushion and down-end cap, the passage of static electricity thus forms together with the valve, which may lead the static electricity caused by sparks generated by friction between the ball and seat during on and off performance to the ground to prevent the possible risk of fire or explosion.

驱动装置安排平台的设置 Mounting Pad Provided

本公司的固定式球阀均设置了安装驱动装置的支架平台，可以方便的安装蜗轮蜗杆传动装置、气动装置、电动装置、液动装置以及气液联动装置等。

Our company is has provided for trunnion ball valve with a mounting pad for fixing the actuators, such as worm gear, pneumatic, electric, hydraulic and pneumatic &hydraulic acturtors.

型号编制说明 Model schedule illustration

阀门的型号根据JB/T308《阀门型号编制方法》进行编制

Valve models compiled per JB/T308 "compilation method of valve model"

固定式球阀的操作扭矩 Operation Torque of Trunnion Ball Valve

表中软密封固定式球阀的操作扭矩是基于常温、清洁介质计算的，在选择驱动装置时，建议驱动装置的驱动扭矩至少是阀门操作扭矩的1.3倍以上。对于高温、低温工况及非清洁的介质，会导致阀门操作扭矩的增大，在驱动装置的选用时应给予充分的考虑。金属硬密封固定式球阀的操作扭矩大约为软密封固定式球阀操作扭矩的3-4倍。

The operation torque data of soft sealed trunnion ball valve in the following table are calculated based on normal temperature and clean medium. As selecting actuator, it is suggested that drive torque of actuator be more than 1.3 times the operation torque of ball valve at least. In case of high temperature and low temperature working conditions or unclean medium, it is possible that valve operation torque gets increased, which should be taken into full consideration as selecting actuators. Operation torque for metal to metal sealed trunnion ball valve is about 3~4 times that of soft sealed trunnion ball valve.

NPS	DN	软密封固定式球阀的操作扭矩 Operation torque of soft sealed trunnion ball valve N.m											
		Class150 PN20	Class300 PN50	Class600 PN110	Class900 PN150	Class1500 PN260	Class2500 PN420	PN16	PN25	PN40	PN63	PN100	PN160
1 1/2	40	–	–	–	–	100	160	–	–	–	–	–	–
2	50	–	–	70	100	155	250	–	–	–	–	70	105
2 1/2	65	–	–	120	170	265	420	–	–	–	–	120	180
3	80	–	–	280	320	500	800	–	–	–	–	230	340
4	100	110	200	340	480	750	1200	100	140	170	240	340	500
5	125	180	290	550	780	1200	1900	160	220	260	350	550	820
6	150	340	480	800	1100	1700	2700	300	380	450	600	800	1150
8	200	500	850	1700	2400	3700	5900	450	630	750	1300	1700	2500
10	250	830	1400	2800	4000	6200	9900	750	1050	1250	2000	2800	4200
12	300	1400	2400	4200	5900	9100	–	1250	1750	2100	2900	4200	6200
14	350	2200	3100	5800	8100	–	–	2000	2600	2800	3700	5800	–
16	400	2600	4800	7500	10500	–	–	2350	3200	4300	5800	7500	–
18	450	3700	6100	9500	–	–	–	3300	4600	5500	–	–	–
20	500	4800	7500	11500	–	–	–	4300	6000	6800	–	–	–
24	600	8200	12000	16500	–	–	–	7400	10000	11000	–	–	–
26	650	9600	15000	–	–	–	–	–	–	–	–	–	–
28	700	12000	19000	–	–	–	–	–	–	–	–	–	–
30	750	14000	22000	–	–	–	–	–	–	–	–	–	–
32	800	16000	28000	–	–	–	–	–	–	–	–	–	–
36	900	20000	35000	–	–	–	–	–	–	–	–	–	–

固定式球阀典型结构及零部件组成 Typical Drawing of Trunnion Ball Valve and Parts Composition

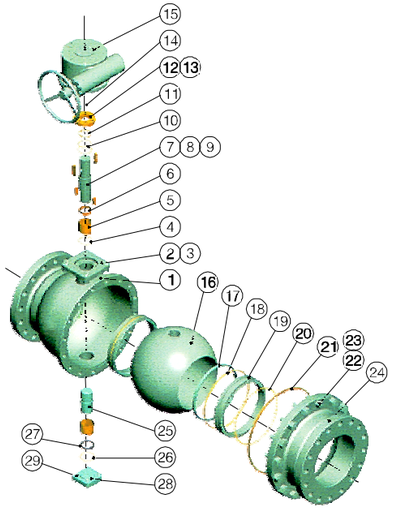

主要零件名称及材料 Parts and Material List

序号 Parts No.	零件名称 Parts Name	材料 Material				
		WCB/A105+HCr(ENP)	WCB/304	WCB/316	CF8	CF8M
1	阀体 Body	ASTM A216 WCB	ASTM A216 WCB	ASTM A216 WCB	ASTM A351 CF8	ASTM A351 CF8M
2	螺柱 Nut	ASTM A194 2H	ASTM A194 2H	ASTM A194 2H	ASTM A194 2H	ASTM A194 2H
3	螺母 Bolting	ASTM A193 B7	ASTM A193 B7	ASTM A193 B7	ASTM A193 B7	ASTM A193 B7
4	O型圈 O ring	Viton	Viton	Viton	Viton	Viton
5	轴套 Stem bearing	Metal backed PTFE	Metal backed PTFE	Metal backed PTFE	Metal backed PTFE	Metal backed PTFE
6	隔圈 Gasket	ASTM A182 F6a	ASTM A182 F304	ASTM A182 F316	ASTM A182 F304	ASTM A182 F316
7	阀杆 Stem	ASTM A182 F6a	ASTM A182 F304	ASTM A182 F316	ASTM A182 F304	ASTM A182 F316
8	键 Key	碳钢 Carbon steel	碳钢 Carbon steel	碳钢 Carbon steel	不锈钢 Stainless steel	不锈钢 Stainless steel
9	键Key	碳钢 Carbon steel	碳钢 Carbon steel	碳钢 Carbon steel	不锈钢 Stainless steel	不锈钢 Stainless steel
10	O型圈 O ring	Viton	Viton	Viton	Viton	Viton
11	垫片 Gasket	PTFE	PTFE	PTFE	PTFE	PTFE
12	压盖 Cover	ASTM A105	ASTM A105	ASTM A105	ASTM A182 F304	ASTM A182 F316
13	螺钉 Capscrew	ASTM A193 B7	ASTM A193 B7	ASTM A193 B7	ASTM A193 B8	ASTM A193 B8M
14	O型圈 O ring	Viton	Viton	Viton	Viton	Viton
15	蜗轮 Gear	碳钢	碳钢 Carbon steel	碳钢 Carbon steel	碳钢 Carbon steel	碳钢 Carbon steel
16	球体 Ball	A105+HCr(ENP)	ASTM A182 F304	ASTM A182 F316	ASTM A182 F304	ASTM A182 F316
17	阀座 Seat	增强Reinforced PTFE	增强Reinforced PTFE	增强Reinforced PTFE	增强Reinforced PTFE	增强Reinforced PTFE
18	O型圈 O ring	Viton	Viton	Viton	Viton	Viton
19	阀座 Seat retainer	ASTM A105	ASTM A105	ASTM A105	ASTM A182 F304	ASTM A182 F316
20	弹簧 Spring	SS304 or Inconel 750	SS304 or Inconel 750	SS316 or Inconel 750	SS304 or Inconel 750	SS316 or Inconel 750
21	垫片 Gasket	Viton or PTFE or Graphite	Viton or PTFE or Graphite	Viton or PTFE or Graphite	Viton or PTFE or Graphite	Viton or PTFE or Graphite
22	螺柱 Body bolting	ASTM A193 B7	ASTM A193 B7	ASTM A193 B7	ASTM A193 B8	ASTM A193 B8M
23	阀母 Body nut	ASTM A194 2H	ASTM A194 2H	ASTM A194 2H	ASTM A194 8	ASTM A194 8M
24	阀盖 Closure	ASTM A216 WCB	ASTM A216 WCB	ASTM A216 WCB	ASTM A351 CF8	ASTM A351 CF8M
25	下轴 Lower trunnion	ASTM A182 F6a	ASTM A182 F304	ASTM A182 F316	ASTM A182 F304	ASTM A182 F316
26	O型圈 O ring	Viton	Viton	Viton	Viton	Viton
27	调整垫 Gasket	ASTM A182 F6a	ASTM A182 F304	ASTM A182 F316	ASTM A182 F304	ASTM A182 F316
28	下端盖 Lower cover	ASTM A105	ASTM A105	ASTM A105	ASTM A182 F304	ASTM A182 F316
29	螺钉 Capscrew	ASTM A193 B7	ASTM A193 B7	ASTM A193 B7	ASTM A193 B8	ASTM A193 B8M

注：上表仅列出了铸钢球阀最常用零部件，根据用户要求或阀门的实际使用工况，我公司可以提供其他多种不同的零部件材料配置。

Note: The chart above only lists out some common composition of steel ball valve parts. We may provide other different parts material composition according to the customer's request or the actual valve working condition.

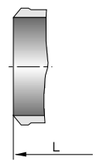

对焊连接 Butt-welding ends

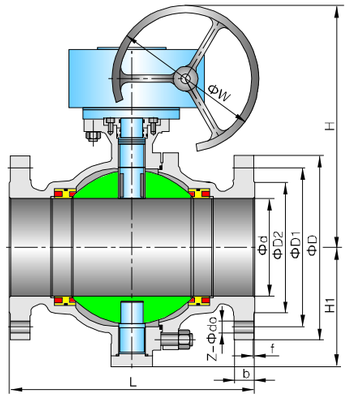

蜗轮蜗杆传动 Gear box

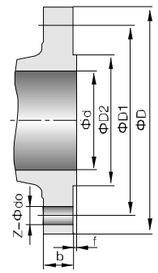

Class600~Class1500法兰 flange

主要外形尺寸及重量 Main Size of Outside & Weight

压力级 Pressure stage	规格 Size DN	NPS	尺寸 Dimensions (mm) L RF	L BW	d	D	D1	D2	b	f	Z-Φdo	H	H1	W	重量 Weight (kg)
Class 150 PN20	100	4	229	305	102	229	190.5	157	24	1.6	8-19	330	135	300	60
	125	5	356	381	127	254	216	186	24	1.6	8-22	360	165	300	80
	150	6	394	457	152	279	241.5	216	25.5	1.6	8-22	392	193	300	101
	200	8	457	521	203	343	298.5	270	29	1.6	8-22	492	240	300	166
	250	10	533	559	254	406	362	324	31	1.6	12-25	548	293	300	283
	300	12	610	635	305	483	432	381	32	1.6	12-25	688	340	400	463
	350	14	686	762	337	533	476	413	35	1.6	12-29	722	372	400	622
	400	16	762	838	387	597	540	470	37	1.6	16-29	722	415	400	900
	450	18	864	914	438	635	578	533	40	1.6	19-32	804	462	500	1150
	500	20	914	991	489	699	635	584	43	1.6	20-32	952	511	600	1360
	600	24	1067	1143	591	813	749.5	692	48	1.6	20-35	1154	601	750	2514
	650	26	1143	1245	633	786	744.5	711	40	1.6	36-22	1300	700	750	3200
	700	28	1245	1346	684	837	795.5	762	43	1.6	40-22	1550	780	750	4000
	750	30	1295	1397	735	887	846	813	43	1.6	44-22	1650	830	750	4800
	800	32	1372	1524	779	941	900	864	44	1.6	48-22	1740	870	750	5800
	900	36	1524	1727	874	1057	1009.5	972	51	1.6	44-26	1950	970	750	8000
Class 300 PN50	100	4	305	305	102	254	200	157	32	1.6	8-22	340	140	300	70
	125	5	381	381	127	279	235	186	35	1.6	8-22	370	170	300	95
	150	6	403	457	152	318	270	216	37	1.6	12-22	402	192	300	128
	200	8	502	521	203	381	330	270	41.5	1.6	12-25	498	246	300	234
	250	10	568	559	254	445	387.5	324	48	1.6	16-29	655	303	400	403
	300	12	648	635	305	521	451	381	51	1.6	16-32	658	348	400	602
	350	14	762	762	337	584	514.5	413	54	1.6	20-32	686	378	400	803
	400	16	838	838	387	648	571.5	470	58	1.6	20-35	880	429	600	1273
	450	18	914	914	438	711	628.5	533	61	1.6	24-35	1050	518	750	1450
	500	20	991	991	489	775	686	584	64	1.6	24-35	1110	540	750	1700
	600	24	1143	1143	591	914	813	692	70	1.6	24-41	1400	650	750	3100
	650	26	1245	1245	633	867	803.5	737	87	1.6	32-35.5	1500	750	750	4500
	700	28	1346	1346	684	921	857	787	87	1.6	36-35.5	1600	800	750	6000
	750	30	1397	1397	735	991	921	845	92	1.6	36-39	1720	860	750	7500
	800	32	1524	1524	779	1054	978	902	102	1.6	32-42	1800	900	750	9000
	900	36	1727	1727	874	1172	1089	1010	102	1.6	32-45	2200	1020	600	12000

压力级 Pressure stage	规格 Size DN	NPS	尺寸 Dimensions (mm) L RF	L RTJ	L BW	d	D	D1	D2	b	f	Z-Φdo	H	H1	W	重量 Weight (kg)
Class 600 PN110	50	2	292	295	292	49	165	127	92	26	6.4	8-19	240	94	300	32
	65	2 1/2	330	333	330	62	190	149	105	29	6.4	8-22	290	115	300	47
	80	3	356	359	356	74	210	168	127	32	6.4	8-22	340	136	300	68
	100	4	432	435	432	100	273	216	157	38	6.4	8-25	358	152	300	106
	125	5	508	511	508	127	330	266.5	186	45	6.4	8-29	400	180	300	170
	150	6	559	562	559	150	356	292	216	48	6.4	12-29	445	209	400	241
	200	8	660	664	660	201	419	349	270	56	6.4	12-32	498	263	400	444
	250	10	787	791	787	252	508	432	324	64	6.4	16-35	653	312	400	668
	300	12	838	841	838	303	559	489	381	67	6.4	20-35	665	354	500	1050
	350	14	889	892	889	334	603	527	413	70	6.4	20-38	738	389	600	1317
	400	16	991	994	991	385	686	603	470	77	6.4	20-41	920	440	750	1800
	450	18	1092	1095	1092	436	743	654	533	83	6.4	20-44	1100	530	750	2400
	500	20	1194	1200	1194	487	813	724	584	89	6.4	24-44	1200	560	750	3000
	600	24	1397	1407	1397	538	940	838	692	102	6.4	24-52	1480	670	750	5400
Class 900 PN150	50	2	368	371	368	49	216	165.1	92	38.5	6.4	8-26	250	98	300	45
	65	2 1/2	419	422	419	62	244	190.5	105	41.5	6.4	8-29	300	120	300	55
	80	3	381	384	381	74	241	190.5	127	38.5	6.4	8-26	345	140	300	94
	100	4	457	460	457	100	292	234.9	157	44.5	6.4	8-32	415	162	300	141
	125	5	559	562	559	125	349	279.4	186	51	6.4	8-35	446	188	300	230
	150	6	610	613	610	150	381	317.5	216	56	6.4	12-32	477	213	400	325
	200	8	737	740	737	201	470	393.7	270	63.5	6.4	12-39	520	270	400	580
	250	10	838	841	838	252	545	469.9	324	70	6.4	16-39	628	322	400	850
	300	12	965	968	965	305	610	533.4	381	79.5	6.4	20-39	680	360	500	1330
	350	14	1029	1038	1029	322	640	558.8	413	86	6.4	20-42	750	400	600	1660
	400	16	1130	1140	1130	373	705	615.9	470	89	6.4	20-45	940	460	750	2280
Class 1500 PN260	40	1 1/2	305	305	305	38	178	123.8	73	32	6.4	4-29	280	100	300	44
	50	2	368	371	368	49	216	165.1	92	38.5	6.4	8-26	320	113	300	67
	65	2 1/2	419	422	419	62	244	190.5	105	41.5	6.4	8-29	340	125	300	80
	80	3	470	473	470	74	267	203.2	127	48	6.4	8-32	385	138	300	130
	100	4	546	549	546	100	311	241.3	157	54	6.4	8-35	415	171	300	192
	125	5	673	676	673	120	375	292.1	186	73.5	6.4	8-42	480	200	400	335
	150	6	705	711	705	144	394	317.5	216	83	6.4	12-39	580	222	400	475
	200	8	832	841	832	192	483	393.7	270	92	6.4	12-45	584	280	400	820
	250	10	991	1000	991	239	585	482.6	324	108	6.4	12-51	650	340	500	1320
	300	12	1130	1146	1130	287	675	571.5	381	124	6.4	16-54	700	370	600	2050
Class 2500 PN420	40	1 1/2	384	387	384	38	203	146	73	44.5	6.4	4-32	290	105	300	72
	50	2	451	454	451	42	235	171.4	92	51	6.4	8-29	320	120	300	104
	65	2 1/2	508	514	508	52	267	196.8	105	57.5	6.4	8-32	350	130	300	140
	80	3	578	584	578	62	305	228.6	127	67	6.4	8-35	400	150	300	202
	100	4	673	683	673	87	356	273	157	76.5	6.4	85-42	425	180	400	305
	125	5	794	807	794	100	419	323.8	186	92.5	6.4	8-48	500	210	400	530
	150	6	914	927	914	131	483	368.3	216	108	6.4	8-54	590	230	500	760
	200	8	1022	1038	1022	179	550	438.1	270	127	6.4	12-54	610	290	500	1200
	250	10	1270	1292	1270	223	675	539.7	324	165.5	6.4	12-67	660	350	600	2080

注：1. RF 表示突出面法兰，RJ表示环连接面法兰。
2. 对于NPS≤24的阀门，本表法兰尺寸接ASME B16.5标准。根据用户要求，法兰尺也可按GB/T9112～9124、HG2065～20626、SH3406设计制造。
3. 对于NPS≥26的阀门，本表法兰尺寸按ASME B16.47标准的B系列、API 605标准及GB/T 13402标准，根据用户要求，法兰尺寸也可按ASME B16.47标准的A系列及MSS SP-44标准。

Notes: 1. RF indicates rased flange, RFJ means ring joint flange, and BW is butt welding ends conneciton.
2. Flange dimensions of the above table for valves of NPS≤24 conforms to ASME B16.5.
3. For valve of NPS ≥26, the flange dimensions of above table conforms to B series of ASME B16.47 and API 605. As required by customers, flange dimensions may also conform to A series of ASME B16.47 and MSS-SP-44.

锻钢固定式球阀 Forged Steel Trunnion Ball Valve

本公司生产的固定式球阀一般采用铸钢阀体，根据用户要求，也可采用锻钢，锻钢固定式球阀的法兰尺寸及结构长度与铸钢固定式球阀相同。

Our company manufactures in general trunnion ball valve of casted steel valve body. However, if required by customers, forged steel valve body is also available, of which the flange dimensions and face to face dimensions are the same as that of cast steel trunnion ball valve.

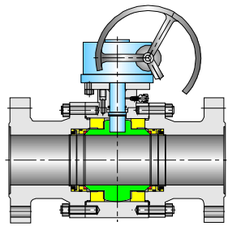

缩径固定式球阀 Ball Valve with Reduced Bore

本公司除了生产全通径固定式球阀外，还生产缩径固定式球阀，以满足用户的不同需求。缩径固定式球阀不仅能适当的降低成本及价格，而且能满足用户的一些特定要求。

Except for full bore ball valves, our company manufactures also the ball valve with reduced bore to meet different requirement of customers, which not only lowers the cost and pricing, but also satisfies the special requirement of customers.

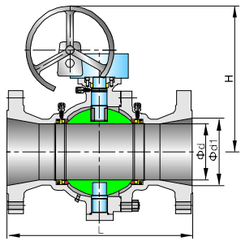

主要外形尺寸及重量 Main Size of Outside & Weight

规格 Size		压力级 Pressure stage												
		Class 150, PN20				Class 300, PN50				Class600, PN10				
DN	NPS	尺寸 Dimensions (mm)												
		L	d	d1	H	L	d	d1	H	L RF	L RJ	d	d1	H
125	5	356	102	127	330	381	102	127	340	508	511	102	127	358
150	6	394	152	152	330	403	127	152	340	559	562	127	152	358
200	8	457	203	203	392	502	152	203	402	660	664	152	200	445
250	10	533	254	254	492	568	203	254	498	787	791	200	248	498
300	12	610	305	305	548	648	254	305	655	838	841	248	298	653
350	14	686	305	337	688	762	305	337	658	889	892	298	327	665
400	16	762	337	387	688	838	337	387	658	991	994	327	375	665
450	18	864	387	438	722	914	387	438	686	1092	1095	375	419	738
500	20	914	438	489	750	991	438	489	880	1194	1200	419	464	920
600	24	1067	540	591	952	1143	540	591	1110	1397	1407	511	559	1200
650	26	1143	589	633	1050	1245	589	633	1250	–	–	–	–	–
700	28	1245	633	684	1154	1346	633	684	1400	–	–	–	–	–
750	30	1295	684	735	1300	1397	684	735	1500	–	–	–	–	–
800	32	1372	735	779	1550	1524	735	779	1600	–	–	–	–	–
900	36	1524	830	874	1740	1727	830	874	1800	–	–	–	–	–

Size		Class 900, PN50					Class 1500, PN260					Class 2500, PN420				
DN	NPS	L RF	L RJ	d	d1	H	L RF	L RJ	d	d1	H	L RF	L RJ	d	d1	H
65	2 1/2	419	422	47	57	250	419	422	47	57	320	508	514	42	52	320
80	3	381	384	57	73	300	470	473	57	70	340	578	584	52	62	350
100	4	457	460	73	98	345	546	549	70	92	385	673	683	62	87	400
125	5	559	562	98	121	415	673	576	92	111	415	794	807	87	100	425
150	6	610	613	121	146	415	705	711	100	144	480	914	927	87	131	500
200	8	737	740	146	190	477	832	841	144	192	580	1022	1038	131	179	590
250	10	838	841	190	234	520	991	1000	192	239	584	1270	1292	179	223	610
300	12	965	968	234	282	628	1130	1146	239	287	650	1422	1445	223	265	660
350	14	1029	1038	303	–	680	–	–	–	–	–	–	–	–	–	–
400	16	1130	1140	322	–	680	–	–	–	–	–	–	–	–	–	–

注：缩径固定球阀的法兰尺寸与全通径固定球阀相同。
Note: Flange dimensions of ball valve with reduced bore are the same as that of full bore ball valve.

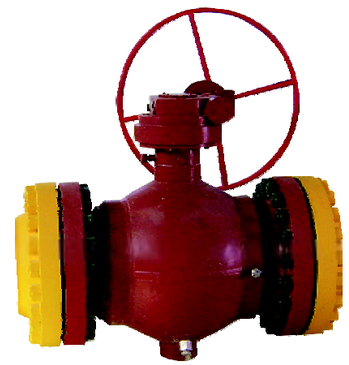

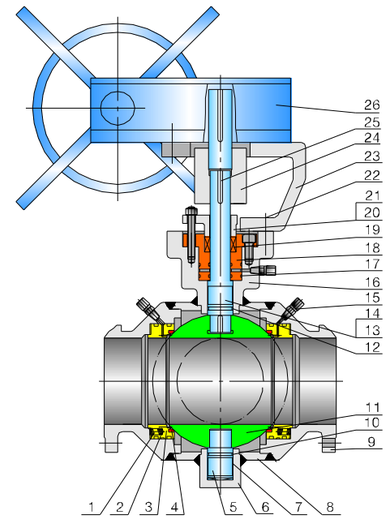

产品采用标准 Technical specification

设计依据 Design reference		GB	API	ASME
设计标准 Design standard		GB/T12237	API 6D	ASME B16.34
结构长度 Structural length	连接法兰 Flanged ends	GB/T12221	API 6D	ASME B16.10
	焊 接 Welded connection	GB/T15188.1		
连接法兰 Flanged ends		GB/T9113 JB/T 79	ASME B16.5、B16.47	
对焊端 Butt-welding ends		GB/T12224	ASME B16.25	
试验和检验 Test & inspection		JB/T 9092	API 6D	API 598

注：阀门连接法兰及对焊端尺寸可根据用户要求设计制造。
Notes: The sizes of valve connecting flange and butt-welding terminas can be designed according to customer's requirement.

主要零件材料 Major parts material form

序号 No.	零件名称 Accessory name	材 料 Material GB	材 料 Material ASTM
1	弹簧 Spring	Inconel x-750	Inconel x-750
2	阀座 Seat	25	A105
3	密封圈 Sealing ring	PTFE	PTFE
4	O型圈 *O* Ring	NBR-18	NBR-18
5	下阀杆 Put the valve stem**	1Cr13	A276-410
6	底盖 Bottom cover	25	A105
7	滑动轴承 Slip the bearing	PTFE	PTFE
8	阀体 Body	25	A105
9	端盖 The end covering	25	A105
10	O型圈 *O* Ring	NBR-18	NBR-18
11	球体 Ball*	A105+HCr	A105+HCr
12	O型圈 *O* Ring	NBR-18	NBR-18
13	阀杆 Stem**	1Cr13	A276-410
14	键 Key	45	AISI C 1045
15	注脂阀 Grease injection valve	组件 Package	组件 Package
16	填料体 Packing body	25	A105
17	O型圈 *O* Ring	NBR-18	NBR-18
18	填料箱 Packing case	25	A105
19	填料垫 Packing seat	1Cr13	A276-410
20	填料 Packing	PTFE；碳纤维；柔性石墨 PTFE; Carbon fibre; Soft graphite	
21	填料压盖 Packing gland	WCB	A216-WCB
22	螺钉 Screw	35CrMo	A193-B7
23	支架 Yoke	Q235A	碳钢 Carbon steel
24	连接套 Connection set	45	AISI C 1045
25	键 Key	45	AISI C 1045
26	驱动装置 Driving	组件 Package	组件 Package

注：*抗硫型阀门该零件的材质为GB(1Cr18Ni9+Ni.P)、ASTM(A182-304+Ni.P)
The material of this part about the anti-sulphur type valve is GB(1Cr18Ni9+Ni.P), ASTM(A182-304+Ni.P)
**抗硫型阀门该零件的材质为GB(1Cr18Ni9)、ASTM(A276-321)
The material of this part about the anti-sulphur type valve is GB(1Cr18Ni9), ASTM(A276-321)
系列阀门主要零部件及密封面的材质可根据实际工况条件或用户特殊要求设计选用。
Major parts of the valve series and materials of sealing surface differ according to actual working condition and customer's special requirement.

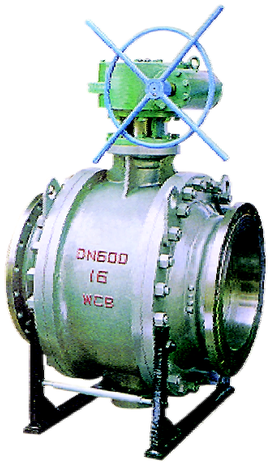

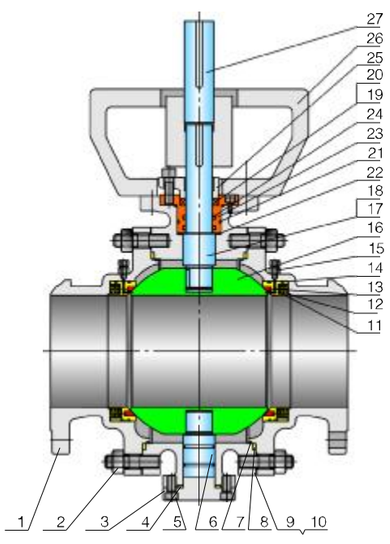

产品采用标准 Technical Specification

设计依据 Design reference	GB
设计标准 Design standard	GB/T19672、GB/T 12237
结构长度 Structural length	GB/T 12221
连接法兰 Flanged endsr	GB/T9113、JB/T 79
对焊端 Butt-welding ends	GB/T 12224
试验和检验 Test & inspection	JB/T 9092

注：阀门连接法兰及对焊端尺寸可根据用户要求设计制造。
Notes: The sizes of valve connecting flange and butt-welding terminas can be designed according to customer's requirement.

主要零件材料 Major Parts Material Form

序号 No.	零件名称 Accessory name	材 料 Material GB
1	端盖 The end covering	WCB
2	螺母 Nut	35
3	底盖 Bottom cover	WCB
4	垫片 Gasket	PTFE、柔性石墨+不锈钢 PTFE,Graphite+stainless steel
5	螺钉 Screw	35CrMo
6	下阀杆Put the valve stem**	1Cr13
7	O型圈 "O" Ring	NBR
8	垫片 Gasket	PTFE、柔性石墨+不锈钢 PTFE,Graphite+stainless steel
9	阀体 Body	WCB
10	排污塞Blowdown is filled in	25
11	弹簧 Spring	65Mn
12	阀座 Seat*	25
13	密封圈 Sealing ring	PTFE
14	O型圈 "O" Ring	NBR
15	注脂阀 Grease injection valve	组件 Package
16	球体 Ball*	WCB+HCr
17	阀杆 Stem**	1Cr13
18	键 Key	45
19	垫片 Gasket	PTFE+不锈钢 PTFE+stainless steel
20	O型圈 "O" Ring	NBR
21	填料箱 Packing case	25
22	螺钉 Screw	35CrMo
23	填料垫 Packing seat	1Cr13
24	填料 packing	PTFE；碳纤维；柔性石墨 PTFE; Carbon fibre; Soft graphite
25	填料压盖 Packing gland	WCB
26	支架 Yoke	Q235A
27	连接套 Connection set	45

注：*抗硫型阀门该零件的材质为GB(1Cr18Ni9+Ni.P)、ASTM(A182-304+Ni.P)
The material of this part about the anti-sulphur type valve is GB (1Cr18Ni9+Ni.P), ASTM(A182-304+Ni.P)
**抗硫型阀门该零件的材质为GB(1Cr18Ni9)、ASTM(A276-321)
The material of this part about the anti-sulphur type valve is GB (1Cr18Ni9),ASTM(A276-321)
系列阀门主要零部件及密封面的材质可根据实际工况条件或用户特殊要求设计选用。
Major parts of the valve series and materials of sealing surface differ according to actual working condition and customer's special requirement.

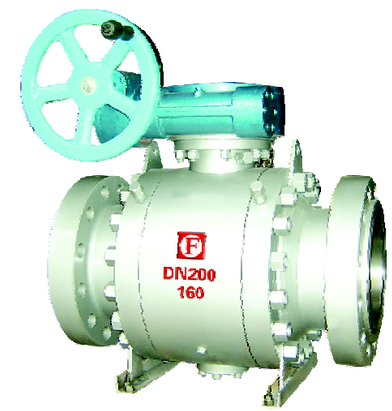

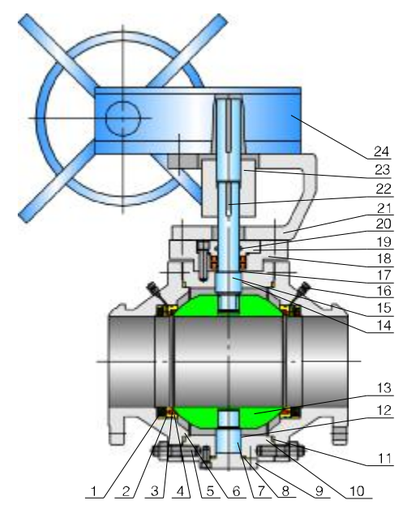

产品采用标准 Technical Specification

设计依据 Design reference	GB
设计标准 Design standard	GB/T19672、GB/T 12237
结构长度 Structural length	GB/T 12221
连接法兰 Flanged endsr	GB/T9113、JB/T 79
对焊端 Butt-welding ends	GB/T 12224
试验和检验 Test & inspection	JB/T 9092

注：阀门连接法兰及对焊端尺寸可根据用户要求设计制造。
Notes: The sizes of valve connecting flange and butt-welding terminas can be designed according to customer's requirement.

主要零件材料 Major Parts Material Form

序号 No.	零件名称 Accessory name	材 料 Material GB
1	弹簧 Spring	Inconel x-750
2	阀座 Seat	25
3	密封圈 Sealing ring	PTFE
4	O型圈 "O" Ring	NBR
5	螺钉 Screw	35CrMo
6	垫片 Gasket	PTFE、柔性石墨 PTFE & Graphite
7	下阀杆 Put the valve stem*	1Cr13
8	垫片 Gasket	PTFE、柔性石墨 PTFE & Graphite
9	底盖 Bottom cover	25
10	阀体、端 Valve body,end	25
11	垫片 Gasket	PTFE、柔性石墨 PTFE & Graphite
12	O型圈 "O" Ring	NBR
13	球体 Ball*	A105+HCr
14	滑动轴承 Slip the bearing	PTFE
15	阀杆 Stem**	1Cr13
16	注脂阀 Grease injection valve	组件 Package
17	垫片 Gasket	PTFE+不锈钢 PTFE & stainless steel
18	填料箱 Packing case	25
19	压盖 Press and cover	25
20	O型圈 "O" Ring	NBR
21	支架 Yoke	Q235A
22	键 Key	45
23	连接套 Connection set	45
24	驱动装置 Driving	组件 Package

注：*抗硫型阀门该零件的材质为GB(1Cr18Ni9+Ni.P)、ASTM(A182-304+Ni.P)
The material of this part about the anti-sulphur type valve is GB (1Cr18Ni9+Ni.P), ASTM(A182-304+Ni.P)
**抗硫型阀门该零件的材质为GB(1Cr18Ni9)、ASTM(A276-321)
The material of this part about the anti-sulphur type valve is GB (1Cr18Ni9),ASTM(A276-321)
系列阀门主要零部件及密封面的材质可根据实际工况条件或用户特殊要求设计选用。
Major parts of the valve series and materials of sealing surface differ according to actual working condition and customer's special requirement.

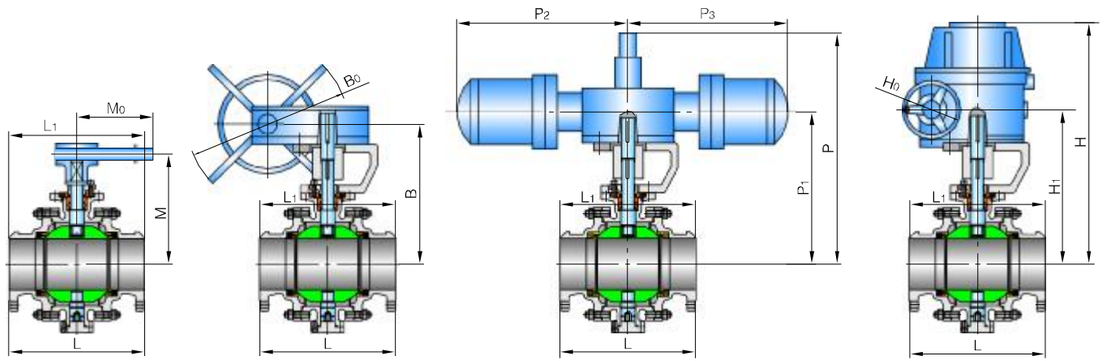

主要外形尺寸 Main Size of Outside

型号Model：(K)Q3(6、7、8、9)4(6)7F(Y、N、PPL)

压力等级 Pressure	公称通径 Nominal dimeter		法兰 Flange	对焊 Butt welding	手 动 Hand-operated		蜗轮蜗杆 Worm gear worm			气动、液动 Air-operating and Fluid driving					电 动 Electric driving			
	mm	in	L	L_1	M	M_0	B	B_0	型号	P	P_1	P_2	P_3	型号	H	H_1	H_0	型 号
1.6MPa	50	2	179	216	107	230	–	–	–	270	174	89	181	AG09	–	–	–	–
	65	2½	191	241	125	400	–	–	–	380	248	148	257	AG13	–	–	–	–
	80	3	203	283	152	400	–	–	–	390	258	148	257	AG13	–	–	–	–
	100	4	229	305	178	650	–	–	–	480	322	287	287	AW13	–	–	–	–
	125	5	356	381	300	1050	–	–	–	555	395	287	287	AW13	–	–	–	–
	150	6	394	457	330	1050	–	–	–	665	457	378	378	AW17	554	337	200	SMC-04+H0BC
	200	8	457	521	–	–	400	600	B	805	595	378	378	AW17	600	382	200	SMC-04+H1BC
	250	10	533	559	–	–	495	600	B	840	630	378	378	AW17	652	435	200	SMC-04+H1BC
	300	12	610	635	–	–	580	800	C	975	728	530	530	AW20	761	480	280	SMC-03+H2BC
	350	14	686	762	–	–	625	800	C	1130	883	530	530	AW20	771	520	280	SMC-03+H2BC
	400	16	762	838	–	–	670	800	D	1460	1154	680	680	AW28	831	580	280	SMC-00+H3BC
	450	18	864	914	–	–	698	800	D	1530	1224	680	680	AW28	921	670	305	SMC-00+H3BC
	500	20	914	991	–	–	840	800	D	1560	1294	680	680	AW28	943	770	305	SMC-0+H4BC
	600	24	1067	1143	–	–	1050	800	DA	1145	915	1455	1455	C1-355	1123	850	305	SMC-0+H4BC
	700	28	1245	1346	–	–	1100	800	DA	1160	930	1455	1455	C1-355	1218	945	400	SMC-1+H5BC
	800	32	1372	1524	–	–	1150	800	DB	1460	1100	1665	1665	C2-490	1328	1055	400	SMC-2+H6BC
	900	36	1524	1727	–	–	1230	800	DB	1540	1180	1665	1665	C2-490	1696	1130	460	SMC-2+H6BC
	1000	40	1753	1956	–	–	1320	800	DC	1630	1280	1960	1960	C3-600	1925	1240	460	SMC-3+H6BC

注：缩径阀门结构长度、连接法兰按不缩径规格；阀门高度、驱动装置尺寸同缩小一个规格尺寸。

Note: The face to face dimension and connecting flange of a diameter reduced valve are per the non-reducing norms; the sizes of both valve height and actuator are reduced by one norm size.

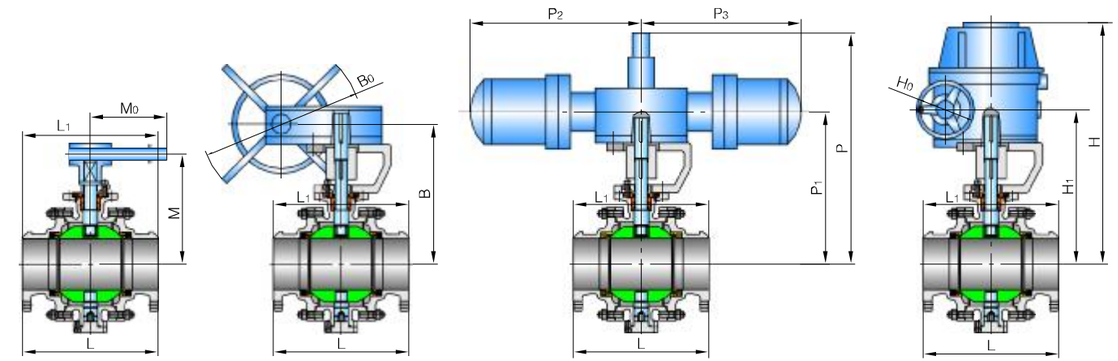

主要外形尺寸 Main Size of Outside

型号Model：(K)Q3(6、7、8、9)4(6)7F(Y、N、PPL)

压力等级 Pressure	公称通径 Nominal dimeter		法兰 Flange	对焊 Butt welding	手 动 Hand-operated		蜗轮蜗杆 Worm gear worm			气动、液动 Air-operating and Fluid driving					电 动 Electric driving			
	mm	in	L	L_1	M	M_0	B	B_0	型号	P	P_1	P_2	P_3	型号	H	H_1	H_0	型 号
2.5MPa 4.0MPa	50	2	216	216	107	230	–	–	–	270	210	148	181	AG13	–	–	–	–
	65	2½	241	241	125	400	–	–	–	380	250	148	257	AG13	–	–	–	–
	80	3	283	283	152	400	–	–	–	390	295	287	287	AW13	–	–	–	–
	100	4	305	305	178	650	–	–	–	455	325	287	287	AW13	–	–	–	–
	125	5	381	381	300	1050	–	–	–	580	390	378	378	AW17	–	–	–	–
	150	6	403	457	330	1050	–	–	–	595	390	378	378	AW17	554	337	200	SMC-04+H0BC
	200	8	502	521	–	–	400	600	B	595	530	378	378	AW17	600	382	200	SMC-04+H0BC
	250	10	568	559	–	–	495	600	B	736	700	530	530	AW20	652	435	200	SMC-04+H1BC
	300	12	648	635	–	–	580	800	C	945	750	530	530	AW20	761	480	280	SMC-04+H1BC
	350	14	762	762	–	–	625	800	C	995	885	680	680	AW28	771	520	280	SMC-03+H2BC
	400	16	838	838	–	–	670	800	D	1280	975	680	680	AW28	831	580	280	SMC-03+H2BC
	450	18	914	914	–	–	698	800	D	1480	1080	680	680	AW28	921	670	305	SMC-00+H3BC
	500	20	991	991	–	–	840	800	DA	1555	1155	1455	1455	C1-355	943	770	305	SMC-00+H3BC
	600	24	1143	1143	–	–	1050	800	DB	1380	930	1455	1455	C1-355	1123	850	305	SMC-0+H4BC
	700	28	1346	1346	–	–	1100	800	DC	1430	980	1665	1665	C2-490	1218	945	400	SMC-0+H4BC
	800	32	1524	1524	–	–	1150	800	DC	1750	1150	1665	1665	C2-490	1328	1055	400	SMC-1+H5BC
	900	36	1727	1727	–	–	1230	800	DD	1540	1180	1960	1960	C3-600	1696	1130	460	SMC-2+H6BC
	1000	40	2083	2083	–	–	1320	800	DD	1630	1280	1960	1960	C3-600	1925	1240	460	SMC-3+H6BC

注：缩径阀门结构长度、连接法兰按不缩径规格；阀门高度、驱动装置尺寸同缩小一个规格尺寸。

Note: The face to face dimension and connecting flange of a diameter reduced valve are per the non-reducing norms; the sizes of both valve height and actuator are reduced by one norm size.

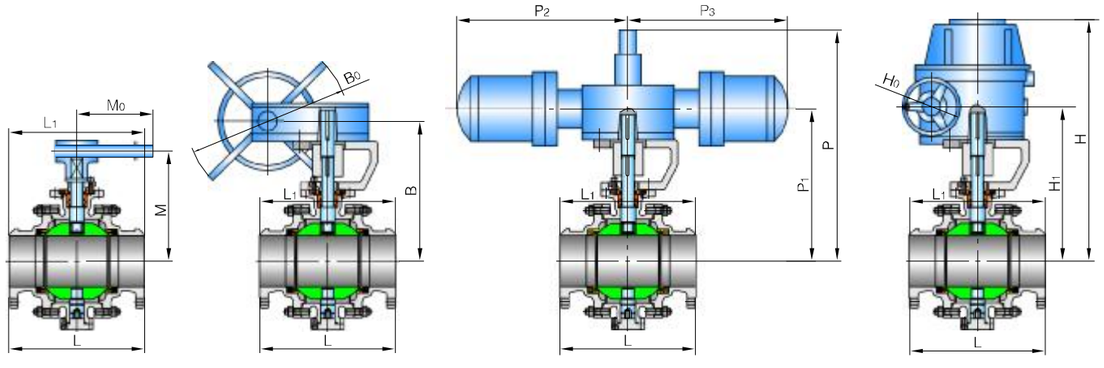

主要外形尺寸 Main Size of Outside

型号Model：(K)Q3(6、7、8、9)4(6)7F(Y、N、PPL)

压力等级 Pressure	公称通径 Nominal dimeter		法兰 Flange	对焊 Butt welding	手 动 Hand-operated		蜗轮蜗杆 Worm gear worm			气动、液动 Air-operating and Fluid driving					电 动 Electric driving			
	mm	in	L	L_1	M	M_0	B	B_0	型号	P	P_1	P_2	P_3	型号	H	H_1	H_0	型 号
6.4MPa	50	2	292	292	110	230	–	–	–	270	210	150	257	AG13	–	–	–	–
	65	2½	330	330	155	400	–	–	–	–	–	–	–	–	–	–	–	–
	80	3	356	356	200	400	–	–	–	520	295	287	287	AW13	–	–	–	–
	100	4	406	406	–	–	235	600	B	640	325	287	287	AW13	–	–	–	–
	150	6	495	495	–	–	300	800	C	730	390	378	378	AW17	554	337	200	SMC-04+H1BC
	200	8	597	597	–	–	375	800	C	840	530	378	378	AW20	600	382	200	SMC-04+H1BC
	250	10	673	673	–	–	445	800	C	1015	700	530	530	AW20	652	480	200	SMC-03+H2BC
	300	12	762	762	–	–	515	800	D	1120	750	530	530	AW28	761	520	280	SMC-00+H3BC
	350	14	826	826	–	–	550	800	D	1225	885	680	680	AW28	771	594	280	SMC-00+H3BC
	400	16	902	902	–	–	615	800	DA	1480	1080	680	680	C1-355	831	632	280	SMC-0+H4BC
	450	18	978	978	–	–	750	800	DA	–	–	–	–	–	921	670	305	SMC-0+H4BC
	500	20	1054	1054	–	–	810	800	DB	1480	1080	680	680	C1-355	943	770	305	SMC-1+H5BC
	600	24	1232	1232	–	–	1050	800	DC	1365	915	1665	1665	C2-490	1123	850	305	SMC-3+H6BC
	700	28	1397	1397	–	–	1100	800	DD	1430	980	1665	1665	C2-490	1218	945	460	SMC-3+H7BC
	800	32	1651	1651	–	–	1180	800	DD	–	–	–	–	–	1328	1055	460	SMC-4+H7BC
	900	36	1880	1880	–	–	1275	800	DH	–	–	–	–	–	1815	1130	600	SMC-4+H7BC
	1000	40	2300	2300	–	–	1370	800	DH	–	–	–	–	–	1925	1240	600	SMC-5+H6BC

注：缩径阀门结构长度、连接法兰按不缩径规格；阀门高度、驱动装置尺寸同缩小一个规格尺寸。

Note: The face to face dimension and connecting flange of a diameter reduced valve are per the non-reducing norms; the sizes of both valve height and actuator are reduced by one norm size.

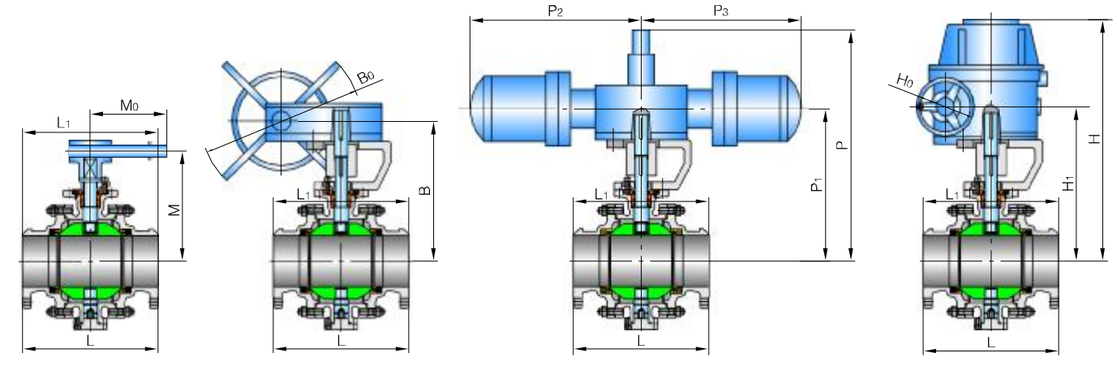

主要外形尺寸 Main Size of Outside

型号Model：(K)Q3(6、7、8、9)4(6)7F(Y、N、PPL)

压力等级 Pressure	公称通径 Nominal dimeter		法兰 Flange	对焊 Butt welding	手 动 Hand-operated		蜗轮蜗杆 Worm gear worm			气动、液动 Air-operating and Fluid driving					电 动 Electric driving			
	mm	in	L	L_1	M	M_0	B	B_0	型号	P	P_1	P_2	P_3	型号	H	H_1	H_0	型 号
10.0MPa	50	2	292	292	110	650	–	–	–	270	210	150	257	AG13	–	–	–	–
	65	2½	330	330	155	650	–	–	–	–	–	–	–	–	–	–	–	–
	80	3	356	356	200	650	–	–	–	520	295	287	287	AW13	–	–	–	–
	100	4	432	432	–	–	235	600	B	640	480	287	287	AW13	–	–	–	–
	150	6	559	559	–	–	300	800	C	730	520	378	378	AW17	600	382	200	SMC-04+H1BC
	200	8	660	660	–	–	375	800	C	840	595	530	530	AW20	652	480	200	SMC-03+H2BC
	250	10	787	787	–	–	445	800	D	1015	770	530	530	AW20	761	520	280	SMC-00+H3BC
	300	12	838	838	–	–	515	800	D	1120	810	680	680	AW28	771	594	280	SMC-00+H3BC
	350	14	889	889	–	–	550	800	DA	1225	1005	1445	1445	C1-355	831	632	280	SMC-0+H4BC
	400	16	991	991	–	–	615	800	DA	1375	1155	1445	1445	C1-355	921	670	305	SMC-0+H4BC
	450	18	1092	1092	–	–	750	800	DB	–	–	–	–	–	943	770	305	SMC-1+H5BC
	500	20	1194	1194	–	–	810	800	DC	1490	1210	1665	1665	C2-490	1123	850	305	SMC-3+H6BC
	600	24	1397	1397	–	–	1050	800	DD	1615	1335	1665	1665	C2-490	1218	945	400	SMC-3+H6BC
	700	28	1549	1549	–	–	1180	800	DH	1760	1410	1960	1960	C3-600	1328	1055	400	SMC-4+H7BC
	800	32	1778	1778	–	–	1250	800	DH	–	–	–	–	–	1458	1135	600	SMC-4+H7BC
	900	36	2083	2083	–	–	1315	800	DH	–	–	–	–	–	1855	1170	600	SMC-5+H7BC
	1000	40	2337	2337	–	–	1420	800	DH	–	–	–	–	–	1960	1285	600	SMC-5+H7BC

注：缩径阀门结构长度、连接法兰按不缩径规格；阀门高度、驱动装置尺寸同缩小一个规格尺寸。

Note: The face to face dimension and connecting flange of a diameter reduced valve are per the non-reducing norms; the sizes of both valve height and actuator are reduced by one norm size.

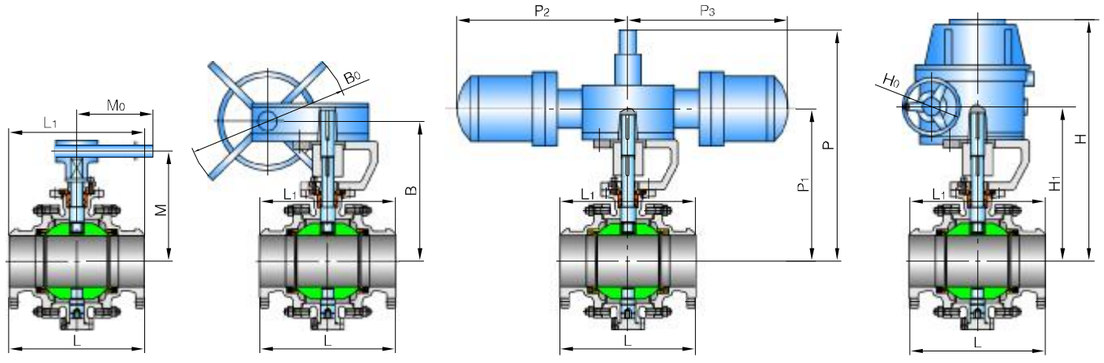

主要外形尺寸 Main Size of Outside

型号Model：(K)Q3(6、7、8、9)4(6)7F(Y、N、PPL)

压力等级 Pressure	公称通径 Nominal dimeter		法兰 Flange	对焊 Butt welding	手 动 Hand-operated		蜗轮蜗杆 Worm gear worm			气动、液动 Air-operating and Fluid driving					电 动 Electric driving			
	mm	in	L	L_1	M	M_0	B	B_0	型号	P	P_1	P_2	P_3	型号	H	H_1	H_0	型 号
16.0MPa	50	2	368	368	220	650	–	–	–	520	295	287	287	AW17	–	–	–	–
	65	2½	419	419	240	650	–	–	–	–	–	–	–	–	–	–	–	–
	80	3	381	381	260	650	–	–	–	730	520	378	378	AW17	–	–	–	–
	100	4	457	457	–	–	300	600	B	845	595	530	530	AW20	600	382	200	SMC-04+H1BC
	150	6	610	610	–	–	365	800	C	1015	770	530	530	AW20	761	520	280	SMC-00+H3BC
	200	8	737	737	–	–	395	800	C	1120	815	680	680	AW28	771	594	280	SMC-00+H3BC
	250	10	838	838	–	–	505	800	D	1225	1005	1445	1445	AW28	831	632	280	SMC-0+H4BC
	300	12	965	965	–	–	575	800	D	1375	1155	1445	1445	C1-355	921	670	305	SMC-0+H4BC
	350	14	1029	1029	–	–	675	800	DA	1490	1210	1665	1665	C1-355	943	770	305	SMC-1+H5BC
	400	16	1130	1130	–	–	765	800	DB	1615	1335	1665	1665	C2-490	1123	850	305	SMC-3+H6BC
	450	18	1219	1219	–	–	870	800	DC	1760	1410	1960	1960	C2-490	1218	945	400	SMC-3+H6BC
	500	20	1321	1321	–	–	895	800	DD	1760	1410	1960	1960	C2-490	1328	1055	400	SMC-4+H7BC
	600	24	1549	1549	–	–	960	800	DH	1760	1410	1960	1960	C3-600	1458	1135	600	SMC-4+H7BC
	700	28	1780	1700	–	–	1210	800	DH	–	–	–	–	–	1904	1180	600	SMC-5+H7BC
	800	32	2050	1780	–	–	1290	1000	DJ	–	–	–	–	–	1984	1260	600	SMC-5+H7BC

注：缩径阀门结构长度、连接法兰按不缩径规格；阀门高度、驱动装置尺寸同缩小一个规格尺寸。
Note: The face to face dimension and connecting flange of a diameter reduced valve are per the non-reducing norms; the sizes of both valve height and actuator are reduced by one norm size.

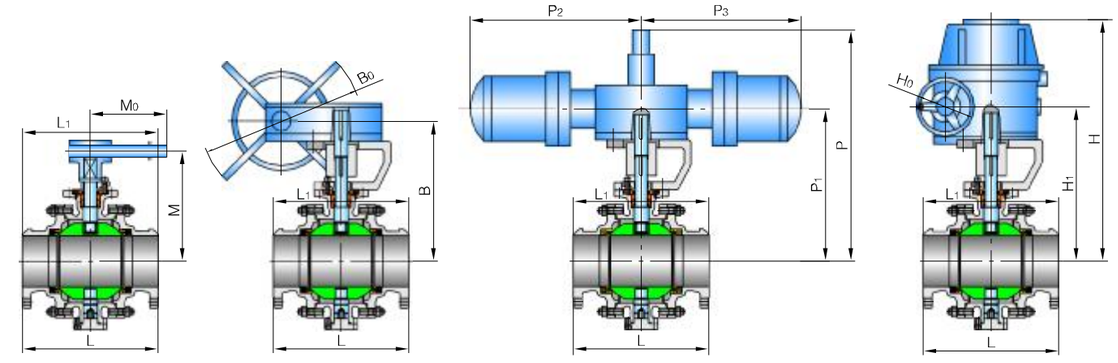

主要外形尺寸 Main Size of Outside

型号Model：(K)Q3(6、7、8、9)4(6)7F(Y、N、PPL)

压力等级 Pressure	公称通径 Nominal dimeter		法兰 Flange	对焊 Butt welding	手 动 Hand-operated		蜗轮蜗杆 Worm gear worm			气动、液动 Air-operating and Fluid driving					电 动 Electric driving			
	mm	in	L	L_1	M	M_0	B	B_0	型号	P	P_1	P_2	P_3	型号	H	H_1	H_0	型 号
25.0MPa	50	2	368	368	220	650	220	600	A	520	295	287	287	AW17	–	–	–	–
	65	2½	419	419	245	650	245	600	A	730	520	378	378	AW17	–	–	–	–
	80	3	470	470	260	650	260	600	B	845	595	530	530	AW17	655	480	200	SMC-04+H1BC
	100	4	546	546	–	–	300	600	B	1015	770	530	530	AW20	765	520	280	SMC-04+H1BC
	150	6	705	705	–	–	365	800	C	1120	815	680	680	AW28	775	595	280	SMC-00+H3BC
	200	8	832	832	–	–	475	800	D	1125	1005	1445	1445	AW28	835	635	280	SMC-00+H3BC
	250	10	991	991	–	–	580	800	D	1375	1155	1445	1445	C1-355	925	670	305	SMC-0+H4BC
	300	12	1130	1130	–	–	700	800	DA	1490	1210	1665	1665	C1-355	945	770	305	SMC-0+H4BC
	350	14	1257	1257	–	–	765	800	DB	1615	1335	1665	1665	C2-490	1125	850	305	SMC-1+H5BC
	400	16	1384	1384	–	–	835	800	DC	1760	1410	1960	1960	C2-490	1220	945	400	SMC-3+H6BC

注：缩径阀门结构长度、连接法兰按不缩径规格；阀门高度、驱动装置尺寸同缩小一个规格尺寸。
Note: The face to face dimension and connecting flange of a diameter reduced valve are per the non-reducing norms; the sizes of both valve height and actuator are reduced by one norm size.

用途 Brief Description

通常情况下，球阀阀座材料采用非金属材料，例如PTFE，因此限制了球阀的应用。通用球阀不能应用于高温工况和介质为颗粒状及除灰系统。针对这种情况，我们公司经过多年的努力研究开发出了金属硬密封球阀，包括浮动式和固定式，从而使球阀在石油、化工、冶金、电力等行业得到广泛的应用。

The seat material of general purpose ball valve employs generally non–metal material, such as PTFE. Limited by the seat material, the general purpose ball valve can not be used in case of high temperature application, application medium with solid articles and ash dregs neither. So the application scope of general purpose ball valve is restricted partially. Taking this into consideration, our company has developed successfully after years of hard study full range of metal to metal sealed ball valve, including floating ball valve and trunnion ball valve, which have found extensive applications in such industries as petroleum, chemistry, power, metallurgy and light industry.

金属硬密封球阀的结构设计特点 Design Features of Metal to Metal Sealed Ball Valve

金属硬密封球阀除了具有防止误操作、防止阀杆飞出、设置驱动装置安装平台等结构特点外，还具有如下独特的特点。

Except for such features as wrong operation prevention, stem blow–out proof, mounting, pad provided, the metal to metal sealed ball valves made by our company's possess the following unique features.

采用先进的球体和阀座硬化技术 Advanced Hardening Technology Employed For Ball and Seat

金属硬密封球阀的球体与阀座完全采用金属对金属的密封方式，可以采用多种先进的球体和阀座的硬化技术，包括超音速喷涂、镍基喷焊、表面特殊硬化、硬质合金喷焊以及采用高强度高硬度陶瓷材料等，球体和阀座的表面硬度一般可以达到HRC600以上，最高可达HRC74以上。密封面材料耐高温一般可达540℃，最高可达980℃。

材料的结合强度可以达到10000PSI以上。密封面材还具有很好的耐磨擦，耐冲击等性能。本公司的金属硬密封球阀能够适用于绝大多数的苛刻工况条件。

Metal to metal sealed design has been employed perfectly for the ball and seat, which has also adopted the advanced hardening technologies, such as ultro–sonic spray coating, nickel base spray welding, surface specially hardening, stellite spray welding, ceramic material with high strength and hardness, and so on. Surface hardness of the ball and seat may generally reach more than HRC60, maximun is up to HRC74, and application temperature of the material may be up to 540℃, maximun is 980℃.

Combining strength of the material gets to more than 10000 PSI. Besides, the surface materials also possess very good resistance properties of friction and impact. Metal to metal sealed ball valves made by our company's are suitable for use in most critical working conditions.

防止阀门在高温下的涨死 Valve Stuck Under High Temperature Prevented

高温工况下由于热膨胀而容易引起球体与阀座的涨死，从而导致阀门无法开启。本公司的金属硬密封球阀采用了碟簧或弹簧加载的专利密封结构，在高温下零部件的热膨胀可以被碟簧或弹簧所吸收，故能够保证阀门在高温下不会被涨死，并能够在高温下灵活启闭。

In the case of high temperature working condition, the valve seat and ball would easily get stuck due to heat expansion, and the valve could not be open. Metal to metal sealed ball valves made by our company's are employ the patented design of bevelling spring loading, which would absorb the heat expansion of parts caused by the bevelling spring. So it is ensured that the valve would not get stuck and be opened and closed easily in the case of high temperature condition.

安全的防火结构设计 An Entire Fire Safe Structure

阀门的密封面采用金属对金属密封结构，填料采用柔性石墨，垫片采用不锈钢+柔性石墨结构。因此，阀门即使在火灾情况也能确保可靠的密封。

The metal to metal sealed structure has been adopted for the valve sealing surface design. Packing is so designed with graphite, and gasket is so designed with stainless steel, plus graphite that the valve can assure reliable tightness even under fire condition.

优异的密封性能 Excellent Tightness Function

采用独特的球体研磨工艺，通过球体与研磨器具在空间不同方位的旋转，使球体表面达到极高的圆度和光洁度，阀门的密封性能完全达到或超过标准要求。

A unique technique has been employed for the ball grinding, which makes the ball surface reach extreme round and smooth by rotating the ball and grinding apparatus at different directions in space. The tightness function of the valve meets completely and exceeds the standard requirement.

自然的防静电结构设计 Natural Anti–static Structure

金属硬密封球阀的阀体、阀座、球体等金属零部件紧密接触，自然形成了静电通道。因此，金属硬密封球阀不需要设置专门的防静电装置。

Metal to metal sealed ball valve with its body seat, ball, other metal parts, and so forth, closely contact with each other, having naturally formed a static electricity passage. In this respect, there is no need to provide special anti–static device.

双阻断及泄放功能 Double–block and Bleed Function

本公司的金属硬密封固定球阀一般采用球前阀座密封结构。金属硬密封固定球阀的两个阀座能独立切断进口端和出口端的介质，实现双阻断功能。当球阀关闭时，即使阀门进出口两端同时受压，阀门中腔和两端通道也可以被相互阻断，中腔内的剩余介质可以通过泄放阀排除。

本公司的金属硬密封浮动球阀采用球后阀座密封结构。一般采用单向密封，并在阀体上标有流向。

Our company's metal to metal sealed trunnion ball valve is in general of the front ball sealing structure. Actually, two seats of the metal to metal sealed trunnion ball valve can both cut off separately the medium at inlet and outlet to realize double–block function. When the valve is closed, the body cavity and both the bore ends can be blocked with each other even if both ends of the valve are under pressure at the same time. whereas the medium left in the body cavity may relieve through the relief valve.

Our company's metal to metal sealed floating ball valve is of behind ball sealing structure, employing in general single direction tightness. The flow direction is indicated on the valve body. If specially required by customers, Our's bi–direction sealing design may be selected.

金属硬密封浮动式球阀 Metal to Metal Sealed Floating Ball Valve

典型结构及零部件组成 Typical Drawing and Parts Composition

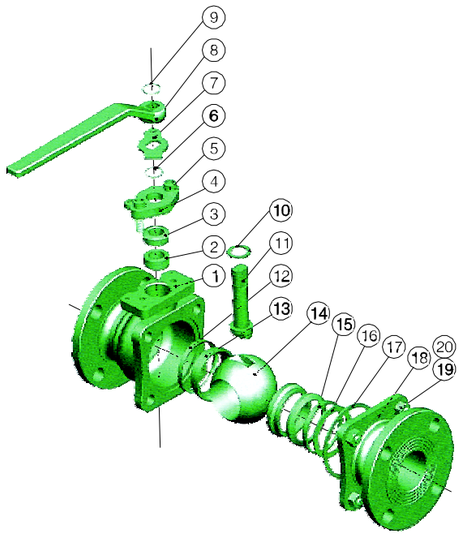

主要零件名称及材料 Parts and Material List

序号 Parts No.	零件名称 Parts name	材料 Materials				
		WCB/13Cr	WCB/304	WCB/316	CF8	CF8M
1	阀体 Body	ASTM A216 WCB	ASTM A216 WCB	ASTM A216 WCB	ASTM A351 CF8	ASTM A351 CF8M
2	填料 Packing	Graphite	Graphite	Graphite	Graphite	Graphite
3	填料压套 Gland	ASTM A182 F6a	ASTM A182 F304	ASTM A182 F316	ASTM A182 F304	ASTM A182 F316
4	填料压板 Gland flange	ASTM A216 WCB	ASTM A216 WCB	ASTM A216 WCB	ASTM A351 CF8	ASTM A351 CF8M
5	螺钉 Capscrew	ASTM A193 B7	ASTM A193 B7	ASTM A193 B7	ASTM A193 B8	ASTM A193 B8M
6	挡圈 Circlip	Carbon steel	Carbon steel	Carbon steel	Stainless steel	Stainless steel
7	定位片 Stop collar	Carbon steel	Carbon steel	Carbon steel	Stainless steel	Stainless steel
8	扳手 Lever	Carbon steel	Carbon steel	Carbon steel	Carbon steel	Carbon steel
9	挡圈 Circlip	Carbon steel	Carbon steel	Carbon steel	Stainless steel	Stainless steel
10	上密封垫 Thrust washer	304 Sheet+Graphite	304 Sheet+Graphite	316 Sheet+Graphite	304 Sheet+Graphite	316 Sheet+Graphite
11	阀杆 Stem	ASTM A182 F6a	ASTM A182 F304	ASTM A182 F316	ASTM A182 F304	ASTM A182 F316
12	阀座密封垫 Seat seal	Graphite	Graphite	Graphite	Graphite	Graphite
13	阀座 Seat	ASTM A182 F6a+ WC-Co	ASTM A182 F304+ WC-Co	ASTM A182 316+ WC-Co	ASTM A182 F304+ WC-Co	ASTM A182 F316+ WC-Co
14	球体 Ball	ASTM A182 F6a + WC-Co	ASTM A182 F304 + WC-Co	ASTM A182 316 + WC-Co	ASTM A182 F304 + WC-Co	ASTM A182 F316 + WC-Co
15	压圈 Seat seal gland	ASTM A182 F6a	ASTM A182 F304	ASTM A182 F316	ASTM A182 F304	ASTM A182 F316
16	碟簧 Spring	Inconel 750	Inconel 750	Inconel 750	Inconel 750	Inconel 750
17	垫片 Gasket	304 Sheet+Graphite	304 Sheet+Graphite	316 Sheet+Graphite	304 Sheet+Graphite	316 Sheet+Graphite
18	阀盖 Bonnet	ASTM A216 WCB	ASTM A216 WCB	ASTM A216 WCB	ASTM A351 CF8	ASTM A351 CF8M
19	螺柱 Stud	ASTM A193 B7	ASTM A193 B7	ASTM A193 B7	ASTM A193 B8	ASTM A193 B8M
20	螺母 Nut	ASTM A194 2H	ASTM A194 2H	ASTM A194 2H	ASTM A194 8	ASTM A194 8M

注：上表仅列出了铸钢球阀最常用零部件，根据用户要求或阀门的实际使用工况，我公司可以提 供其他多种不同的零部件材料配置。

Note: The chart above only lists out some common composition of steel ball valve parts. We may provide other different parts material composition according to the customer's request or the actual valve working condition.

锻钢金属硬密封浮动式球阀
Forged Steel Metal to Metal Sealed Floating Ball Valve

本公司的金属硬密封球阀一般采用铸钢阀体，根据用户要求，也可采用锻钢阀体，锻钢球阀的法兰连结尺寸、结构长度等主要尺寸与铸钢球阀相同。

Our company's metal to metal sealed floating ball valve is in general employing casted steel valve body. If required by customers, forged steel valve body is also available, of which the flange dimensions and face to face dimensions are the same as that of cast steel ball valve.

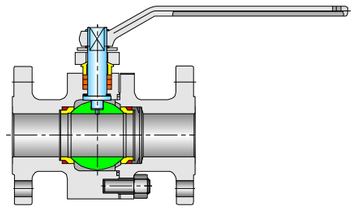

主要尺寸及重量 Main Sizes and Weights

金属硬密封浮动式球阀的主要尺寸及重量参见浮动式球阀，金属硬密封球阀的连接法兰尺寸及结构长度尺寸与浮动式球阀相同。

Refer to that of floating ball valve for main dimensions and weights of metal to metal sealed floating ball valve. The flange dimensions and face to face dimensions are the same as that of floating ball valve.

产品范围 Products Range

金属硬密封浮动球阀的产品范围见下表

Products range of metal to metal sealed floating ball valve as follows.

规格 Size	NPS	1/2	3/4	1	1 1/4	1 1/2	2	2 1/2	3	4	5	6
	DN	15	20	25	32	40	50	65	80	100	125	150
压力等级或公称压力 Pressure stage or nominal pressure	Class150/PN20	☆	☆	☆	☆	☆	☆	☆	☆	△	△	△
	CLass300/PN50	☆	☆	☆	☆	☆	☆	△	△	△	–	–
	Class600/PN110	☆	☆	☆	☆	☆	△	△	△	–	–	–
	Class900/PN150	☆	☆	☆	☆	△	△	△	–	–	–	–
	Class1500/PN260	☆	☆	☆	☆	△	△	–	–	–	–	–
	PN16	☆	☆	☆	☆	☆	☆	☆	☆	△	△	△
	PN25	☆	☆	☆	☆	☆	☆	☆	△	△	△	△
	PN40	☆	☆	☆	☆	☆	☆	☆	△	△	–	–
	PN63	☆	☆	☆	☆	☆	△	△	△	–	–	–
	PN100	☆	☆	☆	☆	☆	△	△	△	–	–	–

注：对于手动球阀，☆表示建议采用扳手，△表示建议采用蜗轮蜗杆传动

Note: For the manual ball valve, ☆ indicates that Lever is suggested, △ indicates that worm gear is suggested.

金属硬密封固定式球阀 Metal to metal sealed trunnion ball valve

典型结构及零部件组成 Typical drawing and parts composition

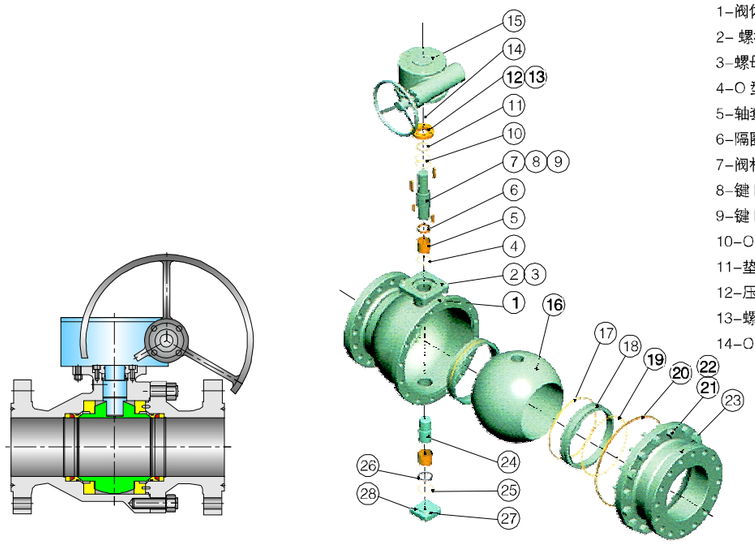

1-阀体 Body
2- 螺柱 Stud
3-螺母 Nut
4-O 型圈 O ring
5-轴套 Bush
6-隔圈 Washer
7-阀杆 Stem
8-键 Key
9-键 Key
10-O 型圈 O ring
11-垫片 Gasket
12-压盖 Gland
13-螺钉 Bolt
14-O 型圈 O ring
15-蜗轮蜗杆传动装置 Worm gear
16-球体 Ball
17-O 型圈 O ring
18-阀座 Seat
19-弹簧 Spring
20-垫片 Gasket
21-螺柱 Stud
22-螺母 Nut
23-阀盖 Bonnet
24-下轴 Trunnion
25-O 型圈 O ring
26-调整垫 Adjusting cushion
27-下端盖 Down end cap
28-螺钉 Bolt

主要尺寸及重量 Main Sizes and Weight

金属硬密封固定式球阀的主要尺寸及重量参见固定式球阀，金属硬密封固定式球阀的连接法兰尺寸及结构长度与固定式球阀相同。

Refer to that of trunnion ball valve for main sizes and weights of metal to metal sealed trunnion ball valve, of which the flange dimensions and face to face dimensions are the same as that of trunnion ball valve.

产品范围 Products Range

金属硬密封固定球阀的产品范围见下表 Products range of metal to metal sealed trunnion ball valve is as below table

规格 Size	NPS	4	5	6	8	10	12	14	16	18	20	24
	DN	100	125	150	200	250	300	350	400	450	500	600
压力等级或公称压力 Pressure stage or nominal pressure	Class150/PN20	△	△	△	△	△	△	△	△	△	△	△
	CLass300/PN50	△	△	△	△	△	△	△	△	△	△	–
	Class600/PN110	△	△	△	△	△	△	△	△	–	–	–
	Class900/PN150	△	△	△	△	△	△	–	–	–	–	–
	Class1500/PN260	△	△	△	△	△	△	–	–	–	–	–
	Class2500/PN420	△	△	△	△	–	–	–	–	–	–	–
	PN16	△	△	△	△	△	△	△	△	△	△	△
	PN25	△	△	△	△	△	△	△	△	△	△	–
	PN40	△	△	△	△	△	△	△	△	△	△	–
	PN63	△	△	△	△	△	△	△	△	–	–	–
	PN100	△	△	△	△	△	△	△	△	–	–	–
	PN160	△	△	△	△	△	–	–	–	–	–	–

注：对于手动球阀，△表示建议采用蜗轮蜗杆传动
Note: For the manual ball valve, △ indicates that worm gear is suggested.

锻钢金属硬密封固定式球阀
Forged steel metal to metal sealed trunnion ball valve

本公司的金属硬密封固定式球阀一般采用铸钢阀体，根据用户要求，也可采用锻钢，锻钢金属硬密封固定式球阀的法兰尺寸及结构长度与铸钢固定式球阀相同。

Our company's metal to metal sealed trunnion ball valve is in general employing casted steel valve body. As per customers' requirement, forged steel valve body is also available, of which the flange dimensions and face to face dimensions are the same as that of cast steel trunnion ball valve.

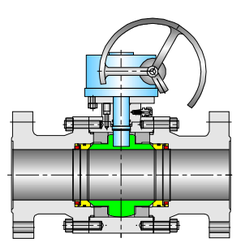

用途 Brief Description

螺纹连接球阀适用于中低压管路，用于截断或接通管路中的介质，其驱动方式一般为手动，也可以采用气动和电动。根据结构设计的不同，可分为三片式，两片式及一片式。

Female threaded ball valves are suitable for use on pipelines of medium or low pressure to turn off or switch on pipeline medium. Operation manners are in general of manual, and pneumatic or electric actuators are available. Based on design structures, the valves get divided into three pieces, two pieces and one piece.

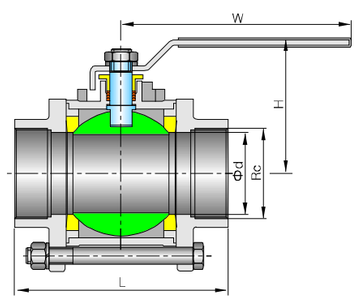

内螺纹连接三片式球阀
Female threaded three piece ball valve

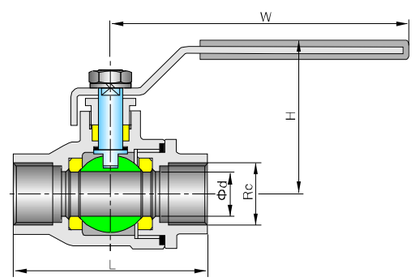

内螺纹连接两片式球阀
Female threaded two pieces ball valve

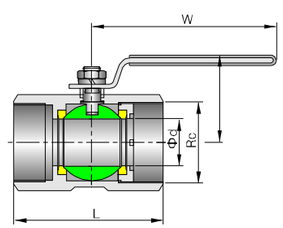

内螺纹连接一片式球阀
Female threaded one piece ball valve

主要外形尺寸及重量 Main Size of Outside & Weight

结构 Structures	规格 Size		Rc	尺寸 Dimensions (mm)				重量 Weight(kg)
	DN	NPS		L	d	W	H	
三片式 Three pieces	10	3/8	3/8	60	10	95	57	0.4
	15	1/2	1/2	75	14	110	68	0.5
	20	3/4	3/4	80	19	110	70	0.7
	25	1	1	90	25	140	80	1.2
	32	1 1/4	1 1/4	110	32	140	85	1.9
	40	1 1/2	1 1/2	120	38	180	100	2.7
	50	2	2	144	50	180	110	3.9
	65	2 1/2	2 1/2	186	64	200	130	7.1
	80	3	3	206	76	250	150	11.5
	100	4	4	240	100	250	170	20.5
二片式 Two pieces	10	3/8	3/8	55	10	95	57	0.3
	15	1/2	1/2	64	14	110	68	0.4
	20	3/4	3/4	75	19	110	70	0.6
	25	1	1	85	25	140	80	1.0
	32	1 1/4	1 1/4	102	32	140	85	1.6
	40	1 1/2	1 1/2	108	38	180	100	2.3
	50	2	2	124	50	180	110	3.3
	65	2 1/2	2 1/2	163	64	200	130	6.0
	80	3	3	185	76	250	150	9.8
一片式 One piece	10	3/8	3/8	39	6	70	35	0.2
	15	1/2	1/2	57	9	95	44	0.3
	20	3/4	3/4	60	12	95	47	0.4
	25	1	1	72	16	110	55	0.6
	32	1 1/4	1 1/4	79	20	110	60	1.1
	40	1 1/2	1 1/2	83	25	140	75	1.5
	50	2	2	101	32	140	80	2.8

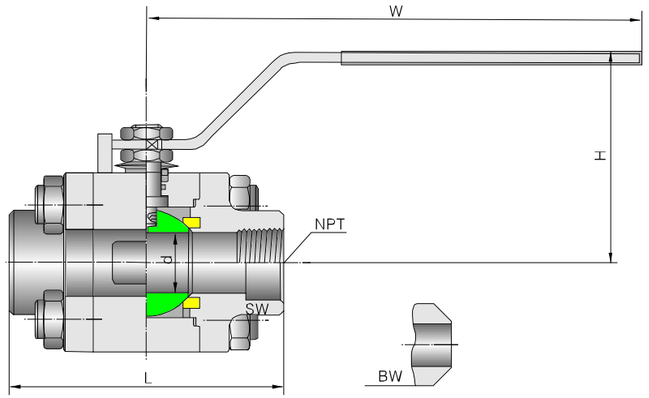

末端连接可按一端螺纹和一端接管(承插焊或对焊)设计按：BS5351
Connection Ends May be Pipe–welded(Butt–welding or Socket Welding) and/or Threaded,Design to BS5351

规格(NPS) Specification	F.P		1/4	3/8	1/2	3/4	1	1 1/4	1 1/2	2
结构长度(mm) Face to Face	L_1		92	92	92	111	127	140	152	152
中心至手柄端(mm) Center to Handle End	B		108	108	108	146	178	178	200	200
中心高度(mm) Height	H		51	51	51	108	81	85	105	105
流道孔径(mm) Flow Port Dimension	d	CL800	6	9	13	18	23	28	35	49
		CL1500	6	9	13	19	25	32	38	49
重量 Weight(kg)			2.5	2.4	2.3	3.4	5.4	6.4	11	13
			2.5	2.4	2.5	3.7	5.8	6.8	11.5	13.7

末端连接可按一端螺纹和一端接管(承插焊或对焊)设计按：BS5351
Connection Ends May be Pipe–welded(Butt–welding or Socket Welding) and/or Threaded,Design to BS5351

规格(NPS) Specification	F.P	1/4	3/8	1/2	3/4	1	1 1/4	1 1/2	2
结构长度(mm) Face to Face	L			110	125	135		160	
中心至手柄端(mm) Center to Handle End	B			170	230	230		310	
中心高度(mm) Height	H			95	110	125			
流道孔径(mm) Flow Port Dimension	d			13	19	25		38	
重量 Weight(kg)				2.7	4.1	6.3		12	

流量系数 Flow coefficient Cv

DN	NPS	Class150~Class600 PN20~PN110		Class900 PN150		Class1500 PN260		Class2500 PN420	
		全通径 Full bore	缩径 Reduced bore	全通径 Full bore	缩径 Reduced bore	全通径 Full bore	缩径 Reduced bore	全通径 Full bore	缩径 Reduced bore
		流量系数 Flow coeffecient Cv							
15	1/2	24	14	24	14	24	14	24	14
20	3/4	55	31	55	31	55	31	55	31
25	1	100	55	100	55	100	55	100	55
32	1 1/4	160	85	160	85	160	85	160	85
40	1 1/2	260	123	260	123	260	123	260	123
50	2	450	218	450	218	450	218	330	160
65	2 1/2	720	340	720	340	720	340	510	240
80	3	1100	490	1100	490	1100	490	770	350
100	4	2200	880	2200	880	2200	880	1700	680
125	5	3000	1380	3000	1380	3000	1380	2300	1060
150	6	5500	1980	5500	1980	5100	1840	4200	1500
200	8	10000	3500	10000	3500	9100	3200	7900	2800
250	10	17000	5460	17000	54600	15300	4900	13300	4300
300	12	24000	7900	24000	7900	21500	7100	18400	6100
350	14	28000	10700	26000	9940	24900	9500	–	–
400	16	36000	14000	33800	13100	31500	12300	–	–
450	18	46000	18000	43300	17000	–	–	–	–
500	20	57000	22000	53300	20600	–	–	–	–
600	24	75000	31500	70200	29500	–	–	–	–
650	26	84000	37000	–	–	–	–	–	–
700	28	93000	43000	–	–	–	–	–	–
750	30	102000	49000	–	–	–	–	–	–
800	32	110500	56000	–	–	–	–	–	–
900	36	133000	71000	–	–	–	–	–	–

卓越品质 • 成就方圆

Excellent quality makes
Fangyuan a great achievement

闸阀系列

Gate valve series

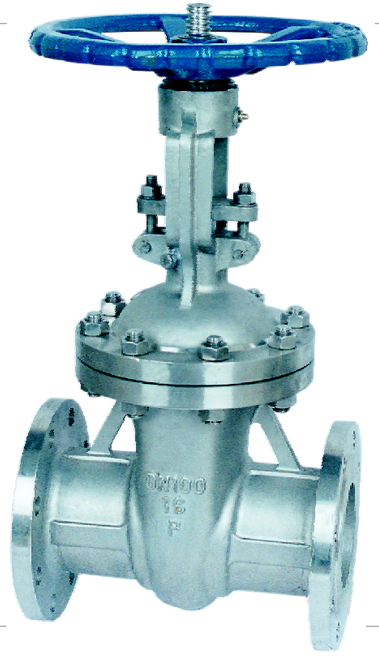

楔式闸阀

锻钢闸阀

锻钢闸阀

电动闸阀

楔式闸阀

FYV

美标闸阀

焊接式闸阀

美标闸阀

型号编制说明 Model schedule illustration

□ □ □ □ □ □ — □ □

- 阀体材料代号 Body material code
- 压力等级代号 Pressure grade code
- 密封面材质代号 Sealing formation code
- 结构形式代号 Design feature code
- 连接形式代号 Connecting type code
- 驱动方式代号 Driving manner code
- 阀门类型代号 Valve type code
- 特殊要求代号 Special requirement code

● 特殊要求代号：体、盖栓接结构(默认)　Hs—体、盖焊接结构　Ps—压力密封结构　D—低温阀门　B—波纹管阀门　E—阀体延长端阀门
Special requirement code: Body, bonnet bolt-jointed structure (default)　Hs-body, bonnet welded structure
Ps-pressure sealed structure　D-low temperature valve　B-bellows valve　E-body extended-end valve

● 阀门类型代号：Z—闸阀
Valve type code: Z—Gate valve

● 驱动方式代号：4—正齿轮传动　5—伞齿轮传动　6—气动　6s—气动带手动　7—液动　9—电动(手轮传动略)　9B—防爆电动
Driving manner code: 4—Spur gear transmission　5—Bevel gear transmission　6—Air driving　6s—Take pneumatically manually
7—Hydrodynamic driving　9—Electric driving (Hand wheel driving omitted)　9B—Explosion electric driving

● 连接形式代号：1—内螺纹　2—外螺纹　4—法兰　6—焊接　8—承插焊
Connecting type code:1—Interior whorl　2—Other whorl　4—Flange　6—Welding　8—Bear and insert welding

● 结构形式代号：1—单闸板　2—双闸板
Design feature code:1—Single-disc　4—Double-disc

● 密封面材质代号：Y—硬质合金　H—合金钢
Sealing formation code: Y—Hard alloy　H—Alloy steel

● 压力等级代号：公称压力为MPa的10倍、磅级为实际数
Pressure grade code: The 10 times of the nominal pressure MPa, pound grade io practical number

● 阀体材料代号：(1)铸造阀体：C—WCB　I—WC6、ZG1Cr5Mo　V—WC9、ZG20CrMoV　P—CF8、ZG1Cr18Ni9Ti
R—CF8M、ZG1Cr18Ni12Mo2Ti　S—CF3　L—CF3M　F—LCB　N—LC3
(2)锻造阀体：C—A105　E—LF2　A—F11　V—F22　P—F304　R—F316　S—F304L　L—F316L
Body material code: (1)Cast the valve body: C—WCB　I—WC6、ZG1Cr5Mo　V—WC9、ZG20CrMoV　P—CF8、ZG1Cr18Ni9Ti
R—CF8M、ZG1Cr18Ni12Mo2Ti　S—CF3　L—CF3M　F—LCB　N—LC3
(2)Forge the valve body : C—A105　E—LF2　A—F11　V—F22　P—F304　R—F316　S—F304L　L—F316L

产品结构特点 Products design features

法兰连接铸钢闸阀适用于公称压力PN1.6～42.0MPa(Class150～2500)，工作温度≤600℃的石油、化工、火力电站等各种工况的管路上，切断或接通管路介质。

Flanged ends cast steel gate valve are used to cut or connect the pipe media under nominal pressure between PN1.6～42.0MPa (Class150～2500), working temperatures ≤600℃. in oil industry, chemical industry, fossil-fired power plants.

其主要结构特点有：

The main structure features include:

1、设计制造严格GB/T12234，API600，API602标准。产品结构合理、密封可靠、性能优良、造型美观。

Both design and manufacture are carried out strictly following GB/T12234, API600 and API602. The products feature a reasonable structure, reliable seal, good performance and nice modeling.

2、密封面堆焊Co基硬质合金，耐磨、耐蚀、抗擦伤性能好，使用寿命长。

Co hard alloy welded sealing surface, which is wearing resistant, erosion proof, abrasion proof and long-lived.

3、阀杆经调质及表面氮化处理，有良好的抗腐蚀性及抗擦伤性。

The surface and the adjusting media of the valve shaft are nitrogenized so that it is erosion and abrasion resistant.

4、公称压力≥15.0MPa(Class900)中腔采用自紧密封式结构，密封性能随压力升高而增强，保证了密封性能。

PN≥15.0Mpa (class900), the middle cavity uses a self-tightening sealing structure to have the sealing performance reinforced along with the pressure rise so as to ensure the sealing performance.

5、阀门设有倒密封结构，密封可靠。

There is no backward sealing structure in the valve, so the sealing id reliable.

6、零件材质及法兰、对焊端尺寸可根据实际工况或用户要求合理选配，满足各种工程需要。

The material of the filling and the flange size can be chosen and matched according to the applications and the requirements of the use's. That can satisfies all kinds of working requirements.

产品主要参数 Main parameter of the products

基本型号 Serial models	(Hs、Ps)Z11H、(Hs、Ps)Z11Y、(Ps)Z41H、(Ps)Z41Y、(Ps)Z441H、(Ps)Z441Y、(Ps)Z541H、(Ps)Z541Y、(Ps)Z941H、(Ps)Z941Y			
压力等级范围 Pressure grade range	PN1.6～42.0MPa (Class150～2500)			
通径范围 Drift diameter range	DN15～1000mm(1"～40")			
驱动方式 Driving manner	手轮驱动 Hand wheel driving			齿轮动、电动 Gear driving and electric driving
适用范围 Scope of application	Class150～300 (PN1.6～4.0)	Class400～600 (PN6.4～10.0)	Class900～2500 (PN15.0～42.0)	2"～40" (DN50～1000mm)
	1/2"～24" (DN15～600mm)	1/2"～12" (DN15～300mm)	1/2"～10" (DN15～250mm)	

产品性能规范 Products performance specification

压力等级 Pressure		常温试验压力(MPa) Testing pressure at constant temperature (Mpa)			适用温度 Applicable temperature	适用介质 Applicable medium
		壳体试验 The shell testing	密封试验 Seal and test	上密封试验 Have and seal testing		
公称压力 (MPa) Nominal rating pressure (PN)	1.6	2.4	1.76	1.76	-196～600℃	水、油品、蒸汽等 Water , oil , steam ,etc.
	2.5	3.8	2.75	2.75		
	4.0	6.0	4.4	4.4		
	6.4	9.6	7.04	7.04		
	10.0	15.0	11.0	11.0		
	16.0	24.0	17.6	17.6		
	25.0	37.5	27.5	27.5		
磅级(Lb) Pound grade (Class)	150	3.0	2.2	2.2		
	300	7.5	5.5	5.5		
	600	15.0	11.0	11.0		
	900	22.5	16.5	16.5		
	1500	37.5	27.5	27.5		
	2500	63.0	46.2	46.2		

产品采用标准 Technical specification

结构形式 Structural formation	栓接阀盖明杆支架结构 Bolt-jointed bonnet outside stem yoke structure
驱动方式 Driving manner	手动、齿轮动、电动 Hand-operated,Gear-operated and Electric-driving
设计标准 Design standard	GB/T 12234
结构长度 Face to face	GB/T 12221
连接法兰 Flanged ends	GB/T 9113、JB/T 79、HG20592
试验和检验 Test & inspection	JB/T 9092

注：阀门连接法兰及对焊端尺寸可根据用户要求设计制造。
Notes: The sizes of valve connecting flange and butt-welding terminas can be designed according to customer's requirement.

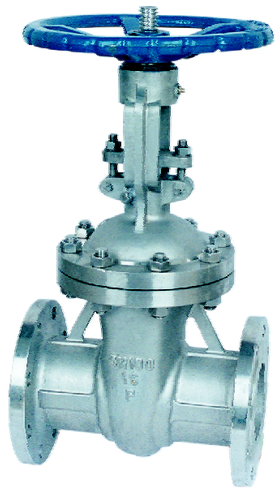

主要零件材料 Major parts material form

序号 No.	零件名称 Part name	材 质 Material
1	阀体 Body	WCB、WC1、WC6、WC9、C5 CF8、CF8M、CF8C、CF3、CF3M
2	闸板 Gate disc	WCB、WC1、WC6、WC9、C5 CF8、CF8M、CF8C、CF3、CF3M
3	阀座 Seat	A105、304、1Cr5Mo、12Cr1MoV
4	阀杆 Stem	1Cr13、2Cr13、1Cr18Ni9 0Cr18Ni12Mo2Ti、20Cr1Mo1V、25Cr2Mov
5	双头螺柱 Stud	35CrMoA、0Cr18Ni9 0Cr17Ni12Mo2、25Cr2MoV
6	六角螺母 Six angle nuts	45、35CrMoA、25Cr2MoV 0Cr18Ni9、0Cr17Ni12Mo2
7	垫片 Gasket	柔性石墨+不锈钢 Graphite & stainless steel
8	上密封座 Back seat	1Cr13、2Cr13、1Cr18Ni9 0Cr18Ni12Mo2Ti、20Cr1Mo1V、25Cr2Mov
9	阀盖 Bonnet	WCB、WC1、WC6、WC9、C5 CF8、CF8M、CF8C、CF3、CF3M
10	填料 Packing	柔性石墨 Graphite
11	填料压套 Packing press-sleeve	1Cr13、2Cr13 1Cr18Ni9、0Cr18Ni12Mo2Ti
12	填料压盖 Packing gland	WCB CF8、CF8M、CF8C、CF3、CF3M
13	阀杆螺母 Valve stem nut	铜合金 Copper alloy
14	手轮 Handwheel	KTH330、QT400-17

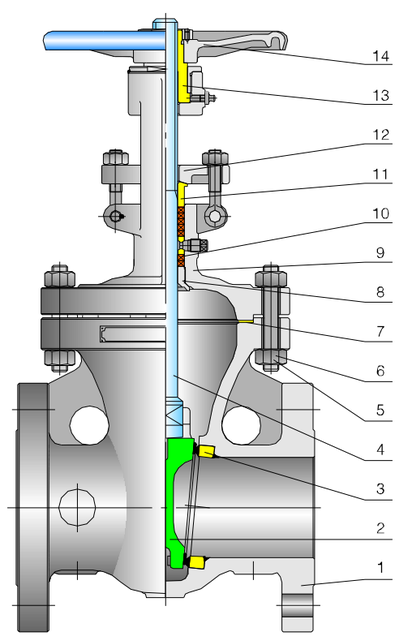

产品采用标准 Technical specification

结构形式 Structural formation	压力密封阀盖明杆支架结构 Pressure sealed bonnet outside stem yoke structure
驱动方式 Driving manner	手动、齿轮动、电动 Hand-operated,Gear-operated and Electric-driving
设计标准 Design standard	GB/T 12234
结构长度 Face to face	GB/T 12221
连接法兰 Flanged ends	GB/T 9113、JB/T 79、HG20592
试验和检验 Test & inspection	JB/T 9092

注：阀门连接法兰及对焊端尺寸可根据用户要求设计制造。
Notes: The sizes of valve connecting flange and butt-welding terminas can be designed according to customer's requirement.

主要零件材料 Major parts material form

序号 No.	零件名称 Part name	材 质 Material
1	阀体 Body	WCB、WC1、WC6、WC9、C5 CF8、CF8M、CF8C、CF3、CF3M
2	阀座 Seat	A105、304、1Cr5Mo、12Cr1MoV
3	闸板 Gate disc	WCB、WC1、WC6、WC9、C5 CF8、CF8M、CF8C、CF3、CF3M
4	阀杆 Stem	1Cr13、2Cr13、1Cr18Ni9 0Cr18Ni12Mo2Ti、20Cr1Mo1V、25Cr2Mov
5	阀盖 Bonnet	WCB、WC1、WC6、WC9、C5 CF8、CF8M、CF8C、CF3、CF3M
6	密封圈 Seal ring	柔性石墨 Graphite
7	四合环 Tetracyclic ring	1Cr13、2Cr13、38CrMoAl
8	双头螺柱 Stud	35CrMoA、0Cr18Ni9 0Cr17Ni12Mo2、25Cr2MoV
9	六角螺母 Six angle nuts	45、35CrMoA、25Cr2MoV 0Cr18Ni9、0Cr17Ni12Mo2
10	填料 Packing	柔性石墨 Graphite
11	支架 Yoke	WCB CF8、CF8M、CF8C、CF3、CF3M
12	轴承 Bearing	外购件 Purchasing parts
13	阀杆螺母 Valve stem nut	铜合金 Copper alloy
14	手轮 Handwheel	KTH330、QT400-17

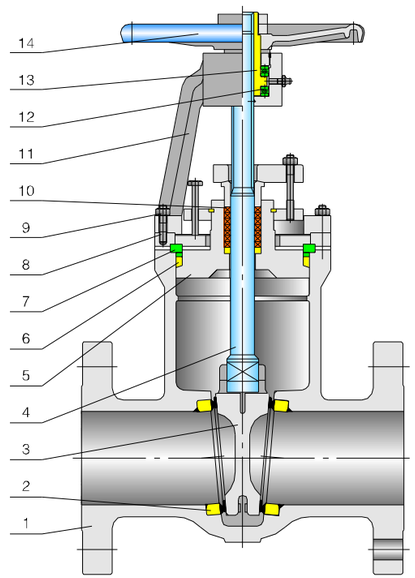

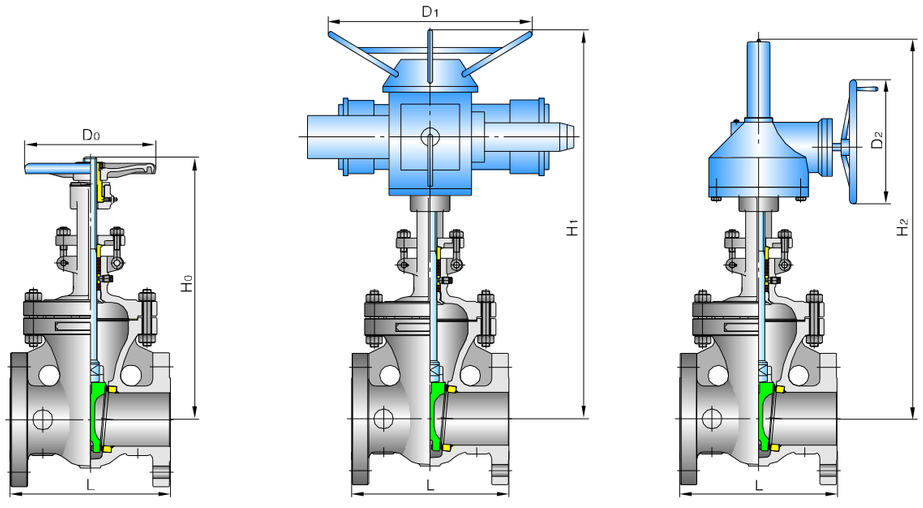

主要外形尺寸及重量 Main size of outside & weight

型号Model：Z41H、Z41Y、Z541H、Z541Y、Z941H、Z941Y

传动方式 Driving			手动 Hand operated			电动 Electric driving				齿轮动 Gear operated			
PN (MPa)	DN (mm)	L	H_0	D_0	重量 Weight (kg)	H_1	D_1	电动装置 Electric driving	重量 Weight (kg)	H_2	D_2	齿轮装置 Gear devlce	重量 Weight (kg)
1.6	15	130	170	120	5	–	–	–	–	–	–	–	–
	20	150	190	140	6.5	–	–	–	–	–	–	–	–
	25	160	205	160	9	–	–	–	–	–	–	–	–
	32	180	270	180	12	–	–	–	–	–	–	–	–
	40	200	310	200	26.5	630	590	DZW10A	87.5	–	–	–	–
	50	250	358	240	29	678	590	DZW10A	90	–	–	–	–
	65	265	373	240	33	693	590	DZW15A	96	–	–	–	–
	80	280	435	280	45	755	590	DZW20A	108	–	–	–	–
	100	300	500	300	62	820	590	DZW20A	126	–	–	–	–
	125	325	614	320	106	934	590	DZW30A	173	–	–	–	–
	150	350	674	360	135	994	590	DZW30A	199	–	–	–	–
	200	400	818	400	193	1138	590	DZW30A	254	–	–	–	–
	250	450	969	450	273	1409	810	DZW45A	310	–	–	–	–
	300	500	1145	560	380	1588	810	DZW60A	391	1310	310	BA-0	504
	350	550	1280	640	590	1755	830	DZW90	729	1468	310	BA-0	674
	400	600	1452	640	850	1902	830	DZW120	992	1780	460	BA-1	950
	450	650	1541	720	910	2141	870	DZW180	1168	1880	460	BA-1	1300
	500	700	1676	720	960	2276	870	DZW250	1222	2110	460	BA-2	1530
	600	800	1874	800	1115	2474	870	DZW250	1376	2410	460	BA-2	2140
	700	900	–	–	–	3046	1170	DZW350	–	2600	460	BA-2	3270
	800	1000	–	–	–	3250	1170	DZW500	–	2860	610	BAA-3	3920
	900	1100	–	–	–	3509	1060	DZW800	–	3170	610	BAA-3	4435
	1000	1200	–	–	–	3873	1060	DZW1000	–	–	–	–	–

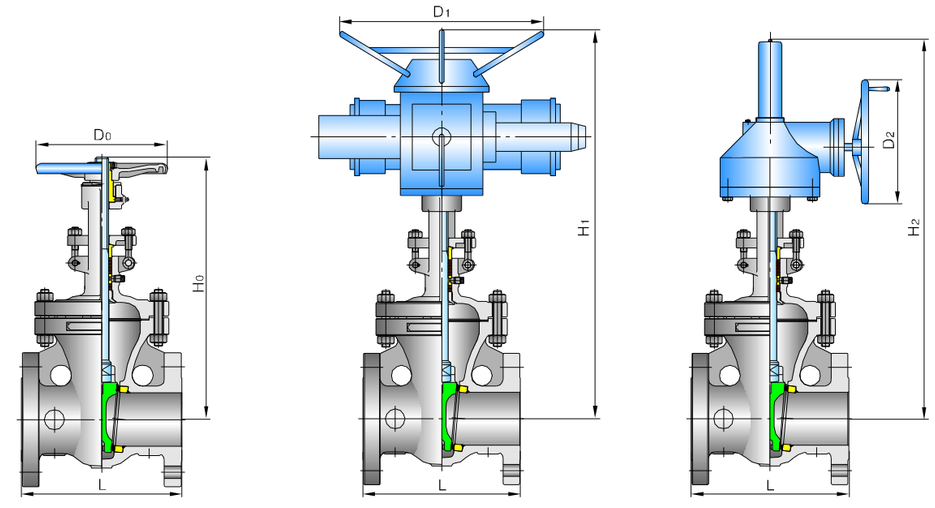

主要外形尺寸及重量 Main size of outside & weight

型号Model：Z41H、Z41Y、Z541H、Z541Y、Z941H、Z941Y

传动方式 Driving			手动 Hand operated			电动 Electric driving				齿轮动 Gear operated			
PN (MPa)	DN (mm)	L	H_0	D_0	重量 Weight (kg)	H_1	D_1	电动装置 Electric driving	重量 Weight (kg)	H_2	D_2	齿轮装置 Gear devlce	重量 Weight (kg)
2.5	15	130	170	120	5.5	–	–	–	–	–	–	–	–
	20	150	190	140	7	–	–	–	–	–	–	–	–
	25	160	205	160	11	–	–	–	–	–	–	–	–
	32	180	270	180	14	–	–	–	–	–	–	–	–
	40	200	310	200	30	630	590	DZW10A	91	–	–	–	–
	50	250	358	240	34	678	590	DZW10A	95	–	–	–	–
	65	265	373	240	36	693	590	DZW15A	99	–	–	–	–
	80	280	435	280	50	755	590	DZW20A	113	–	–	–	–
	100	300	500	300	69	820	590	DZW20A	132	–	–	–	–
	125	325	614	320	116	934	590	DZW30A	181	–	–	–	–
	150	350	674	360	141	994	590	DZW30A	206	–	–	–	–
	200	400	818	400	192	1138	590	DZW30A	257	–	–	–	–
	250	450	969	450	207	1409	810	DZW45A	317	–	–	–	–
	300	500	1145	560	400	1588	810	DZW60A	412	1310	310	BA-0	504
	350	550	1280	640	631	1755	830	DZW90	750	1468	310	BA-0	674
	400	600	1452	640	900	1902	830	DZW120	1042	1780	460	BA-1	950
	450	650	1541	720	1013	2141	870	DZW180	1274	1880	460	BA-1	1300
	500	700	1676	720	1166	2276	870	DZW250	1420	2110	460	BA-2	1530
	600	800	1874	800	1258	2474	870	DZW250	1522	2410	460	BA-2	2140
	700	900	–	–	–	3046	1170	DZW350	–	2600	460	BA-2	3275
	800	1000	–	–	–	3250	1170	DZW500	–	2860	610	BAA-3	3924
	900	1100	–	–	–	3509	1060	DZW800	–	3170	610	BAA-3	4435
	1000	1200	–	–	–	3873	1060	DZW1000	–	–	–	–	–

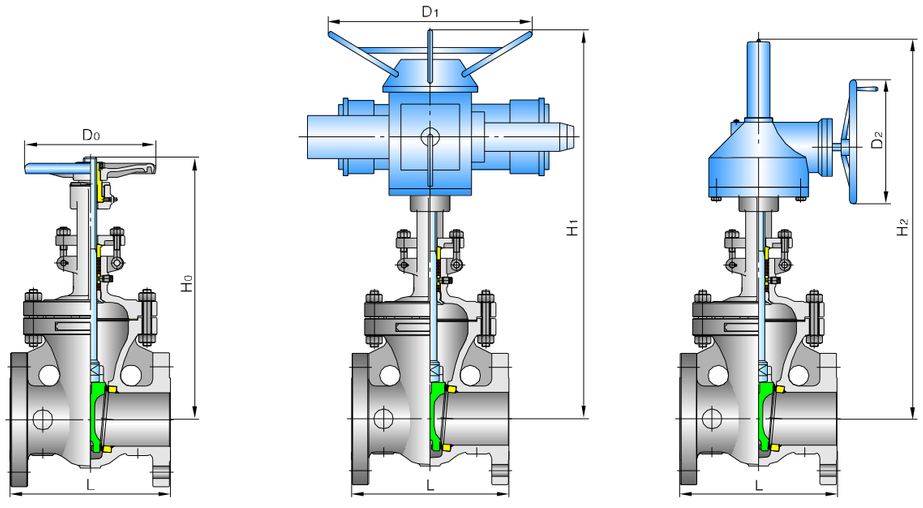

主要外形尺寸及重量 Main size of outside & weight

型号Model：Z41H、Z41Y、Z541H、Z541Y、Z941H、Z941Y

传动方式 Driving			手动 Hand operated			电动 Electric driving				齿轮动 Gear operated			
PN (MPa)	DN (mm)	L	H_0	D_0	重量 Weight (kg)	H_1	D_1	电动装置 Electric driving	重量 Weight (kg)	H_2	D_2	齿轮装置 Gear devlce	重量 Weight (kg)
4.0	15	130	135	120	6	–	–	–	–	–	–	–	–
	20	150	190	140	8	–	–	–	–	–	–	–	–
	25	160	205	160	12	–	–	–	–	–	–	–	–
	32	180	270	180	15	–	–	–	–	–	–	–	–
	40	200	310	200	31	630	590	DZW10A	92	–	–	–	–
	50	250	371	280	34	670	590	DZW10A	95	–	–	–	–
	65	280	391	280	39	712	590	DZW15A	102	–	–	–	–
	80	310	455	320	52	775	590	DZW20A	115	–	–	–	–
	100	350	551	360	80	875	590	DZW20A	163	–	–	–	–
	125	400	628	400	127	948	590	DZW20A	190	–	–	–	–
	150	450	708	400	154	1030	590	DZW30A	219	–	–	–	–
	200	550	885	460	263	1325	590	DZW45A	373	–	–	–	–
	250	650	906	560	368	1400	810	DZW60A	480	–	–	–	–
	300	750	1203	640	547	1655	830	DZW90	686	1500	460	BA-1	630
	350	850	1341	640	679	1795	830	DZW120	821	1960	460	BA-1	985
	400	950	1492	720	953	2093	870	DZW180	1214	2170	460	BA-1	1430
	500	1150	–	–	–	2645	870	DZW250	2150	2450	610	BA-2	2040
	600	1350	–	–	–	2865	1170	DZW350	–	2940	610	BA-2	3050
	700	1450	–	–	–	3450	1170	DZW500	–	–	–	–	–
	800	1650	–	–	–	3920	1060	DZW800	–	–	–	–	–

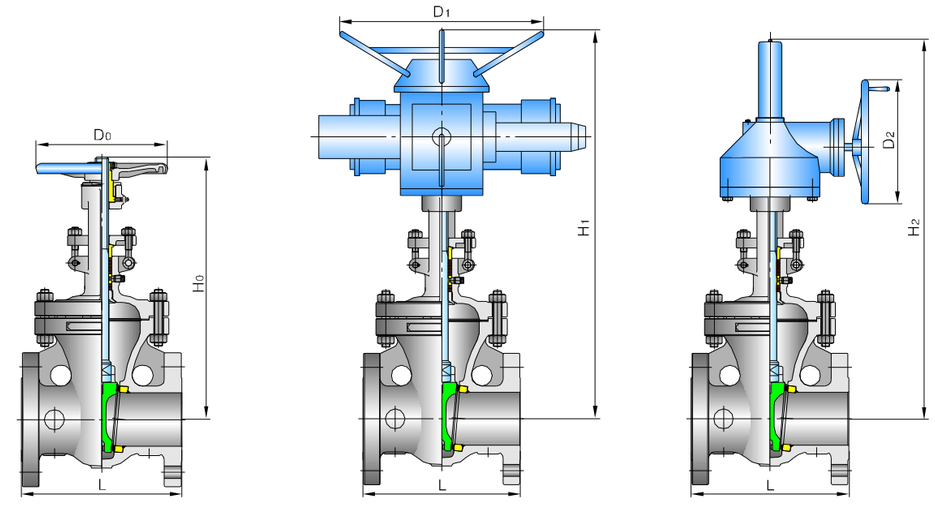

主要外形尺寸及重量 Main size of outside & weight

型号Model：Z41H、Z41Y、Z541H、Z541Y、Z941H、Z941Y

传动方式 Driving			手动 Hand operated			电动 Electric driving				齿轮动 Gear operated			
PN (MPa)	DN (mm)	L	H_0	D_0	重量 Weight (kg)	H_1	D_1	电动装置 Electric driving	重量 Weight (kg)	H_2	D_2	齿轮装置 Gear devlce	重量 Weight (kg)
6.4	15	170	140	100	7	–	–	–	–	–	–	–	–
	20	190	140	100	9	–	–	–	–	–	–	–	–
	25	210	215	180	12	–	–	–	–	–	–	–	–
	32	230	270	180	16	–	–	–	–	–	–	–	–
	40	240	345	200	32	665	590	DZW10A	93	–	–	–	–
	50	250	470	200	39	790	590	DZW15A	102	–	–	–	–
	65	280	520	250	43	840	590	DZW20A	106	–	–	–	–
	80	310	570	300	60	890	590	DZW20A	123	–	–	–	–
	100	350	700	300	89	1020	590	DZW30A	154	–	–	–	–
	125	400	780	350	140	1100	590	DZW30A	205	–	–	–	–
	150	450	850	350	207	1290	590	DZW45A	317	–	–	–	–
	200	550	1035	400	325	1475	810	DZW60A	437	1420	310	BA-0	430
	250	650	1050	560	467	1500	830	DZW90	606	1580	460	BA-1	530
	300	750	1470	640	590	1820	830	DZW120	732	1770	460	BA-1	590
	350	850	–	–	–	2216	870	DZW180	1110	2060	460	BA-1	840
	400	950	–	–	–	2838	870	DZW250	1540	2270	460	BA-1	1410
	500	1150	–	–	–	3320	1170	DZW350	–	–	–	–	–
	600	1350	–	–	–	3684	1170	DZW500	–	–	–	–	–

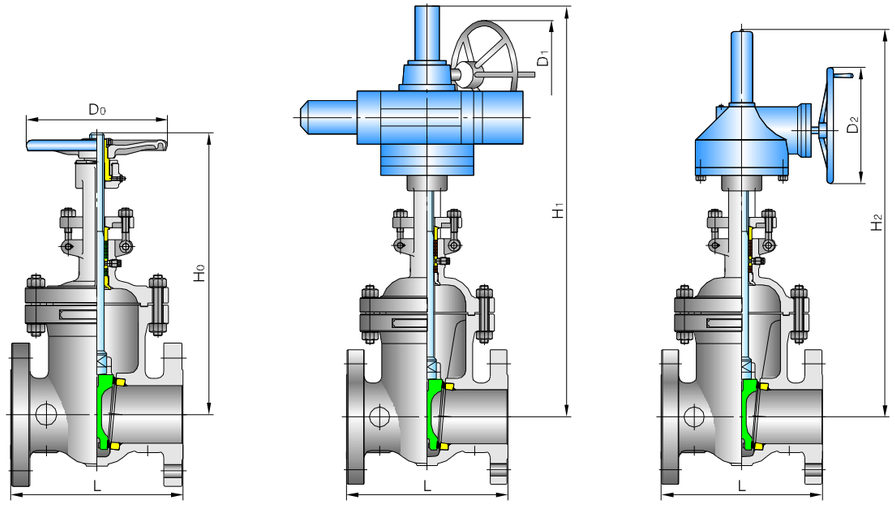

主要外形尺寸及重量 Main size of outside & weight

型号Model：Z41H、Z41Y、Z541H、Z541Y、Z941H、Z941Y

传动方式 Driving			手动 Hand operated			电动 Electric driving				齿轮动 Gear operated			
PN (MPa)	DN (mm)	L	H_0	D_0	重量 Weight (kg)	H_1	D_1	电动装置 Electric driving	重量 Weight (kg)	H_2	D_2	齿轮装置 Gear devlce	重量 Weight (kg)
10.0	40	240	360	320	50	680	590	DZW15A	113	–	–	–	–
	50	250	490	360	60	810	590	DZW20A	123	–	–	–	–
	65	280	540	400	70	860	590	DZW20A	133	–	–	–	–
	80	310	572	400	100	896	590	DZW30A	165	–	–	–	–
	100	350	573	400	110	1013	590	DZW45A	220	–	–	–	–
	125	400	744	560	180	1184	810	DZW60A	292	–	–	–	–
	150	450	800	560	250	1250	830	DZW90	389	–	–	–	–
	200	550	800	560	360	1250	830	DZW120	502	1490	310	BA-0	730
	250	650	1050	600	420	1650	870	DZW180	790	1720	460	BA-1	900
	300	750	1200	640	530	1800	870	DZW250	910	1890	460	BA-1	1200
	350	850	–	–	–	2030	1170	DZW350	1610	2180	610	BA-2	1700
	400	950	–	–	–	2250	1170	DZW500	2512	2390	610	BA-2	2500
	500	1150	–	–	–	2550	1060	DZW800	3200	–	–	–	–

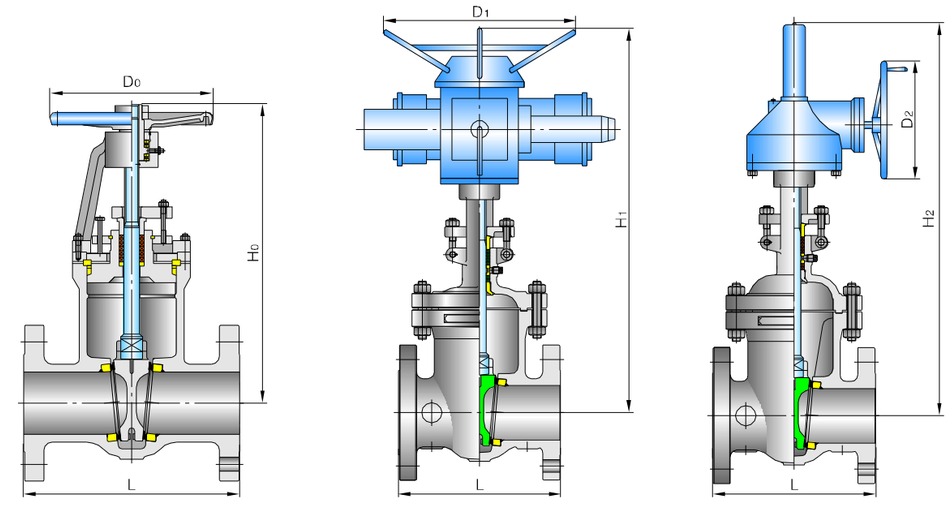

主要外形尺寸及重量 Main size of outside & weight

型号Model：(Ps)Z41H、(Ps)Z41Y、(Ps)Z541H、(Ps)Z541Y、(Ps)Z941H、(Ps)Z941Y

传动方式 Driving			手动 Hand operated			电动 Electric driving				齿轮动 Gear operated			
PN (MPa)	DN (mm)	L	H_0	D_0	重量 Weight (kg)	H_1	D_1	电动装置 Electric driving	重量 Weight (kg)	H_2	D_2	齿轮装置 Gear devlce	重量 Weight (kg)
16.0	40	260	395	320	26	670	590	DZW15A	118	–	–	–	–
	50	300	612	360	73	832	590	DZW20A	136	–	–	–	–
	65	340	677	360	110	880	590	DZW30A	175	–	–	–	–
	80	390	686	400	141	905	590	DZW30A	206	–	–	–	–
	100	450	751	450	185	1071	590	DZW45A	295	–	–	–	–
	125	525	868	560	320	1163	810	DZW60A	432	–	–	–	–
	150	600	997	640	462	1170	830	DZW90	601	1250	460	BA-1	492
	200	750	1224	720	711	1440	830	DZW120	853	1520	460	BA-1	780
	250	850	–	–	–	1760	870	DZW180	1300	1540	610	BA-2	1140
	300	950	–	–	–	2230	870	DZW250	1750	1620	610	BA-3	1720
25.0	50	350	350	360	69	813	590	DZW30A	129	–	–	–	–
	65	410	410	400	90	855	590	DZW30A	154	–	–	–	–
	80	470	470	400	133	1016	590	DZW45A	233	–	–	–	–
	100	550	550	560	246	1099	810	DZW60A	348	–	–	–	–
	125	650	650	560	480	1160	830	DZW90	610	–	–	–	–
	150	750	750	640	700	1240	830	DZW120	840	–	–	–	–
	200	832	832	720	1075	1520	870	DZW180	1225	–	–	–	–
	250	991	991	800	1980	1680	870	DZW250	2130	–	–	–	–

产品采用标准 Technical specification

结构形式 Structural formation	栓接阀盖明杆支架结构 Bolt-jointed bonnet outside stem yoke structure
驱动方式 Driving manner	手动、齿轮动、电动 Hand-operated,Gear-operated and Electric-driving
设计标准 Design standard	API600、API6D
结构长度 Face to face	ASME B16.10
连接法兰 Flanged ends	ASME B16.15
试验和检验 Test & inspection	API 598

注：阀门连接法兰及对焊端尺寸可根据用户要求设计制造。
Notes: The sizes of valve connecting flange and butt-welding terminas can be designed according to customer's requirement.

主要零件材料 Major parts material form

序号 No.	零件名称 Part name	材 质 Material
1	阀体 Body	ASTM A216-WCB ASTM A217-WC1、WC6、WC9、C5 ASTM A351-CF8、CF8M、CF8C、CF3、CF3M
2	闸板 Gate disc	ASTM A216-WCB ASTM A217-WC1、WC6、WC9、C5 ASTM A351-CF8、CF8M、CF8C、CF3、CF3M
3	阀座 Seat	ASTM A105 ASTM A182-F11、F22、F5、F9
4	阀杆 Stem	ASTM A182Gr.F6a、ASTM A182F22 ASTM A182-F304、F316、F321、F304L、F316L
5	双头螺柱 Stud	ASTM A193-B7、A320-B8、A193-B8M
6	六角螺母 Six angle nuts	ASTM A194-2H、A194-8、A194-8M
7	垫片 Gasket	柔性石墨+不锈钢 Graphite & stainless steel
8	上密封座 Back seat	ASTM A182Gr.F6a、ASTM A182F22 ASTM A182-F304、F316、F321、F304L、F316L
9	阀盖 Bonnet	ASTM A216-WCB ASTM A217-WC1、WC6、WC9、C5 ASTM A351-CF8、CF8M、CF8C、CF3、CF3M
10	填料 Packing	柔性石墨 Graphite
11	填料压套 Packing press-sleeve	ASTM A182Gr.F6a ASTM CHI A182-F304、F316、F321、F304L、F316L
12	填料压盖 Packing gland	ASTM A216-WCB ASTM A351-CF8、CF8M、CF8C、CF3、CF3M
13	阀杆螺母 Valve stem nut	铜合金 Copper alloy
14	手轮 Handwheel	ASTM A47-32510

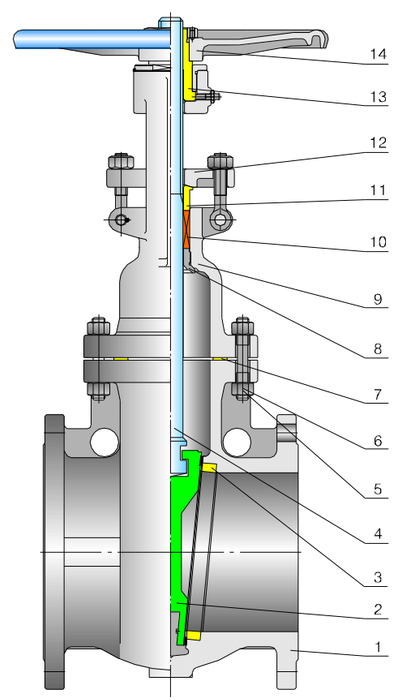

产品采用标准 Technical specification

结构形式 Structural formation	压力密封阀盖明杆支架结构 Pressure sealed bonnet outside stem yoke structure
驱动方式 Driving manner	手动、齿轮动、电动 Hand-operated,Gear-operated and Electric-driving
设计标准 Design standard	API600、API6D
结构长度 Face to face	ASME B16.10
连接法兰 Flanged ends	ASME B16.15
试验和检验 Test & inspection	API 598

注：阀门连接法兰及对焊端尺寸可根据用户要求设计制造。
Notes: The sizes of valve connecting flange and butt-welding terminas can be designed according to customer's requirement.

主要零件材料 Major parts material form

序号 No.	零件名称 Part name	材 质 Material
1	阀体 Body	ASTM A216-WCB ASTM A217-WC1、WC6、WC9、C5 ASTM A351-CF8、CF8M、CF8C、CF3、CF3M
2	阀座 Seat	ASTM A105 ASTM A182-F11、F22、F5、F9
3	闸板 Gate disc	ASTM A216-WCB ASTM A217-WC1、WC6、WC9、C5 ASTM A351-CF8、CF8M、CF8C、CF3、CF3M
4	阀杆 Stem	ASTM A182GrF6a、ASTM A182F22 ASTM A182-F304、F316、F321、F304L、F316L
5	阀盖 Bonnet	ASTM A216-WCB ASTM A217-WC1、WC6、WC9、C5 ASTM A351-CF8、CF8M、CF8C、CF3、CF3M
6	密封圈 Seal ring	柔性石墨 Graphite
7	四合环 Tetracyclic ring	ASTM A182Gr.F6a、ASTM A182 F22
8	双头螺柱 Stud	ASTM A193-B7、A320-B8、A193-B8M
9	六角螺母 Six angle nuts	ASTM A194-2H、A194-8、A194-8M
10	填料 Packing	柔性石墨 Graphite
11	支架 Yoke	ASTM A216-WCB ASTM A351-CF8、CF8M、CF8C、CF3、CF3M
12	驱动装置 Driving device	电动 Electric driving

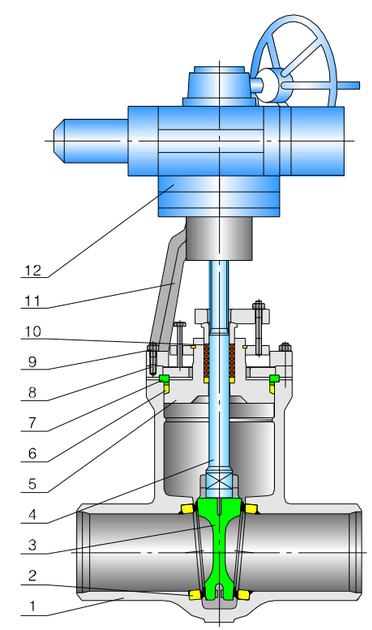

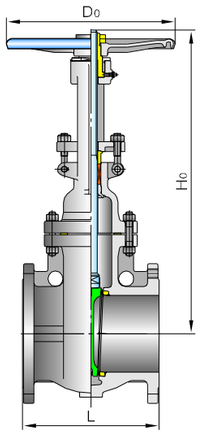

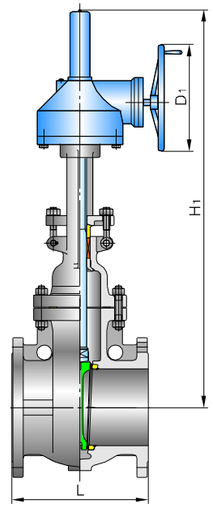

主要外形尺寸及重量 Main size of outside & weight

型号Model：Z41H、Z41Y、Z541H、Z541Y、Z941H、Z941Y

传动方式 Driving			手动 Hand operated			齿轮动 Gear operated			
Class	NPS (in)	L	H_0	D_0	重量 Weight (kg)	H_1	D_1	齿轮装置 Gear devlce	重量 Weight (kg)
150	2	178	360	200	22	–	–	–	–
	2 1/2	190	410	200	31	–	–	–	–
	3	203	440	250	45	–	–	–	–
	4	229	500	250	61	–	–	–	–
	5	254	580	300	89	–	–	–	–
	6	267	660	300	121	–	–	–	–
	8	292	775	350	134	–	–	–	–
	10	330	925	450	280	–	–	–	–
	12	356	1100	500	321	–	–	–	–
	14	381	1295	600	450	1651	310	BA-0	455
	16	406	1435	600	605	1879	460	BA-1	645
	18	432	1626	650	810	2184	460	BA-1	850
	20	457	1829	650	880	2431	610	BA-2	950
	24	508	2175	700	1490	2873	610	BA-2	1460
	26	559	2235	750	1750	3086	610	BA-2	1830
	28	610	2310	750	2010	3327	610	BA-2	2080
	30	610	2695	800	2268	3606	610	BAA-3	2565
	32	660	–	–	–	3708	610	BAA-3	3100
	36	711	–	–	–	3924	610	BAA-3	3950
	40	812	–	–	–	4318	610	BAA-3	4650
	42	812	–	–	–	4546	610	BAA-3	5100
	48	1066	–	–	–	5181	610	BAA-3	6500

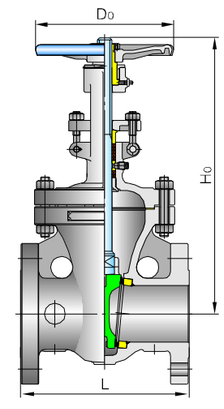

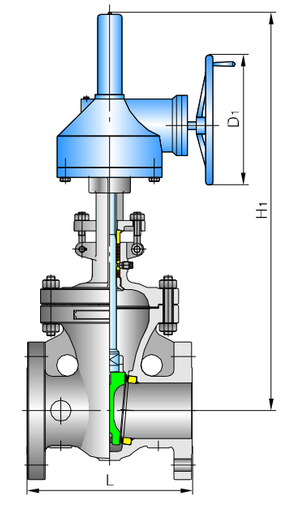

主要外形尺寸及重量 Main size of outside & weight

型号Model：Z41H、Z41Y、Z541H、Z541Y、Z941H、Z941Y

传动方式 Driving			手动 Hand operated			齿轮动 Gear operated			
Class	NPS (in)	L	H_0	D_0	重量 Weight (kg)	H_1	D_1	齿轮装置 Gear devlce	重量 Weight (kg)
300	2	216	380	200	24	–	–	–	–
	2 1/2	241	410	250	34	–	–	–	–
	3	283	450	250	49	–	–	–	–
	4	305	530	300	70	–	–	–	–
	5	381	700	300	115	–	–	–	–
	6	403	730	350	133	–	–	–	–
	8	419	820	450	231	–	–	–	–
	10	457	1010	500	329	–	–	–	–
	12	502	1130	560	530	–	–	–	–
	14	762	1489	600	730	1790	460	BA-1	850
	16	838	1580	650	930	1968	460	BA-1	1105
	18	914	2017	700	1250	2273	610	BA-2	1300
	20	991	2228	700	1520	2482	610	BA-2	1625
	24	1143	2650	750	2340	3054	610	BA-2	2800
	26	1245	–	–	–	3219	610	BA-2	3100
	28	1346	–	–	–	3378	610	BAA-3	3600
	30	1397		–	–	3530	610	BAA-3	4200
	32	1524	–	–	–	3695	610	BAA-3	4850
	36	1727	–	–	–	3987	610	BAA-3	5900
	40	1955	–	–	–	4445	610	BAA-3	8100
	42	2032	–	–	–	4699	610	BAA-3	9750
	48	2966	–	–	–	5435	610	BAA-3	13050

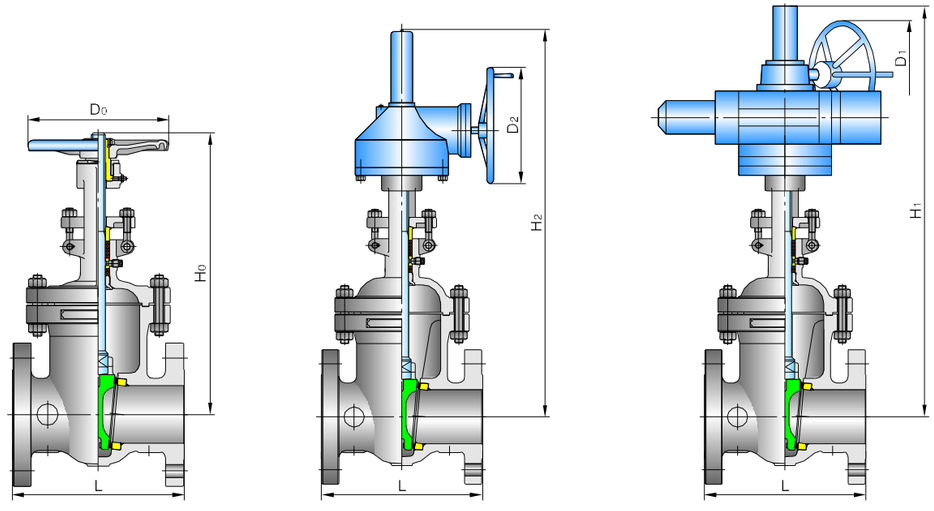

主要外形尺寸及重量 Main size of outside & weight

型号Model：Z41H、Z41Y、Z541H、Z541Y、Z941H、Z941Y

传动方式 Driving			手动 Hand operated			齿轮动 Gear operated				电动 Electric driving			
Class	NPS (in)	L	H_0	D_0	重量 Weight (kg)	H_1	D_1	齿轮装置 Gear devlce	重量 Weight (kg)	H_2	D_2	电动装置 Electric driving	重量 Weight (kg)
600	2	292	425	250	42	–	–	–	–	550	590	DZW20A	112
	2 1/2	330	485	300	62	–	–	–	–	600	590	DZW20A	135
	3	356	510	300	85	–	–	–	–	660	590	DZW30A	194
	4	432	610	400	120	–	–	–	–	780	590	DZW45A	223
	5	508	700	450	176	–	–	–	–	850	810	DZW60A	296
	6	559	820	500	230	840	310	BA-0	255	990	830	DZW90	385
	8	660	920	600	390	930	310	BA-0	418	1130	830	DZW120	541
	10	787	1080	600	620	1105	460	BA-1	674	1360	870	DZW180	816
	12	838	1220	650	880	1220	460	BA-1	935	1520	870	DZW250	1090
	14	889	1473	700	1350	1380	610	BA-2	1440	1730	1170	DZW350	1560
	16	991	1651	800	1700	1435	610	BA-2	1790	1840	1170	DZW500	1950
	18	1092	1727	800	2140	1915	610	BA-2	2230	2370	1060	DZW800	2390
	20	1194	2019	800	2450	2095	610	BAA-3	2540	2600	1060	DZW800	2580
	24	1397	–	–	–	2155	610	BAA-3	4550	3160	1060	DZW1000	4580
	26	1448	–	–	–	2271	610	BAA-3	5260	–	–	–	–
	28	1549	–	–	–	2436	610	BAA-3	5960	–	–	–	–
	30	1651	–	–	–	2577	610	BAA-3	6700	–	–	–	–
	32	1778	–	–	–	2781	610	BAA-3	8312	–	–	–	–
	36	2083	–	–	–	3113	610	BAA-3	10125	–	–	–	–
	40	2149	–	–	–	3241	610	BAA-3	14300	–	–	–	–
	42	2260	–	–	–	3572	610	BAA-3	16460	–	–	–	–
	48	2667	–	–	–	4261	610	BAA-3	22900	–	–	–	–

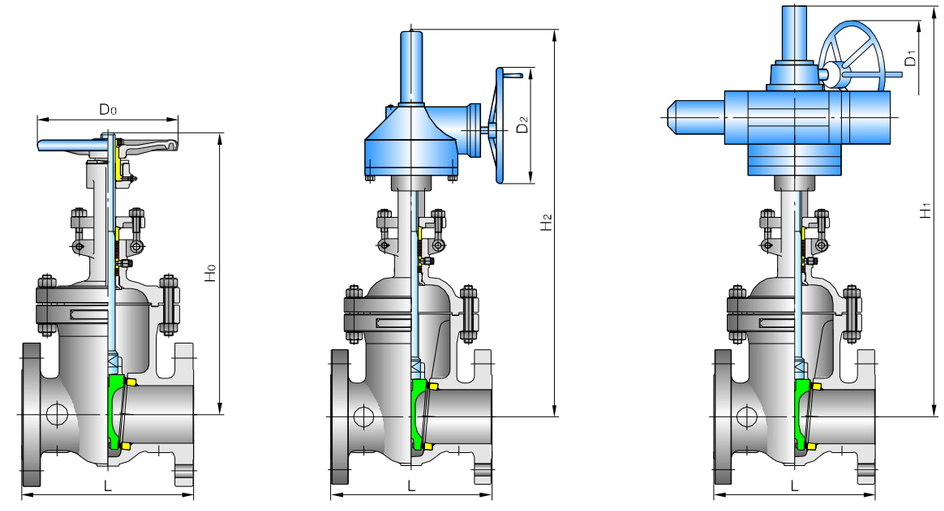

主要外形尺寸及重量 Main size of outside & weight

型号Model：Z41H、Z41Y、Z541H、Z541Y、Z941H、Z941Y

传动方式 Driving			手动 Hand operated			齿轮动 Gear operated				电动 Electric driving			
Class	NPS (in)	L	H_0	D_0	重量 Weight (kg)	H_1	D_1	齿轮装置 Gear devlce	重量 Weight (kg)	H_2	D_2	电动装置 Electric driving	重量 Weight (kg)
900	2	372	540	300	65	–	–	–	–	832	590	DZW20A	145
	2 1/2	422	555	350	83	–	–	–	–	880	590	DZW30A	200
	3	384	625	350	115	–	–	–	–	910	590	DZW30A	300
	4	460	730	400	195	–	–	–	–	1020	590	DZW45A	325
	6	613	860	600	410	895	460	BA-1	440	1060	830	DZW90	570
	8	740	930	600	720	1070	460	BA-1	720	1150	830	DZW120	885
	10	841	1090	650	1090	1290	610	BA-2	1140	1320	870	DZW180	1300
	12	968	1245	700	1625	1540	610	BA-2	1720	1580	870	DZW250	1870
	14	1038	–	–	–	1620	610	BAA-3	2400	1660	1170	DZW350	2370
	16	1140	–	–	–	1730	610	BAA-3	3040	1780	1170	DZW500	3010
1500	3	473				–	–	–	–	960	590	DZW45A	335
	4	549				–	–	–	–	1040	810	DZW60A	445
	6	711				1250	460	BA-1	640	1250	830	DZW120	785
	8	841				1600	460	BA-1	990	1600	870	DZW180	1140
	10	1000				–	–	–	–	1860	870	DZW250	1790
	12	1146				–	–	–	–	2150	1170	DZW350	2810
	14	1276				–	–	–	–	2380	1170	DZW500	4190
	16	1407				–	–	–	–	2580	1060	DZW800	4970

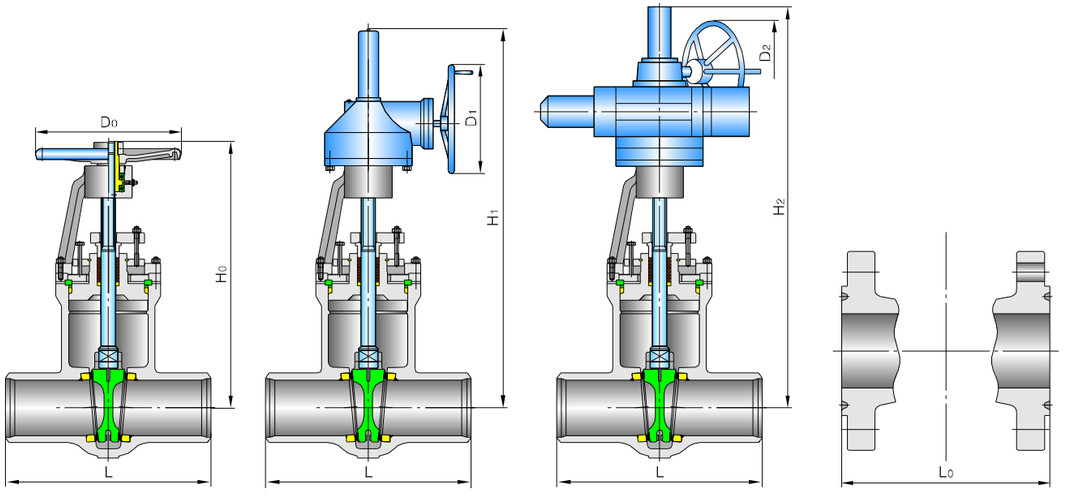

主要外形尺寸及重量 Main size of outside & weight

型号Model：PsZ41H、PsZ41Y、PsZ541H、PsZ541Y、PsZ941H、PsZ941Y　法兰连接 Flanged ends (RTJ)

传动方式 Driving			手动 Hand operated			齿轮动 Gear operated				电动 Electric driving			
Class	NPS (in)	L_0	H_0	D_0	重量 Weight (kg)	H_1	D_1	齿轮装置 Gear devlce	重量 Weight (kg)	H_2	D_2	电动装置 Electric driving	重量 Weight (kg)
900	2	371	550	250	88	–	–	–	–	835	590	DZW20A	130
	3	384	605	350	105	–	–	–	–	975	590	DZW30A	142
	4	460	750	400	140	–	–	–	–	1200	590	DZW45A	204
	6	613	840	500	300	895	460	BA-1	350	1280	830	DZW90	356
	8	740	–	–	–	1370	460	BA-1	530	1372	830	DZW120	530
	10	841	–	–	–	1495	610	BA-2	950	1495	870	DZW180	950
	12	968	–	–	–	1830	610	BA-2	1400	1830	870	DZW250	1400
	14	1038	–	–	–	2145	610	BA-2	2010	2144	1170	DZW350	1800
	16	1140	–	–	–	2405	610	BAA-2	2700	2406	1170	DZW500	3000
	20	1334	–	–	–	2750	610	BAA-2	4400	2800	1060	DZW800	3800

型号Model：PsZ61H、PsZ61Y、PsZ561H、PsZ561Y、PsZ961H、PsZ961Y　对焊连接 Butt welding ends

传动方式 Driving			手动 Hand operated			齿轮动 Gear operated				电动 Electric driving			
Class	NPS (in)	L	H_0	D_0	重量 Weight (kg)	H_1	D_1	齿轮装置 Gear devlce	重量 Weight (kg)	H_2	D_2	电动装置 Electric driving	重量 Weight (kg)
900	2	368	550	250	68	–	–	–	–	835	590	DZW20A	120
	3	381	605	350	85	–	–	–	–	975	590	DZW30A	135
	4	457	750	400	102	–	–	–	–	1200	590	DZW45A	202
	6	610	840	500	200	895	460	BA-1	280	1280	830	DZW90	293
	8	737	–	–	–	1370	460	BA-1	460	1372	830	DZW120	472
	10	838	–	–	–	1495	610	BA-2	820	1495	870	DZW180	844
	12	965	–	–	–	1830	610	BA-2	1150	1830	870	DZW250	1184
	14	1029	–	–	–	2145	610	BA-2	1500	2144	1170	DZW350	1579
	16	1130	–	–	–	2405	610	BAA-2	2100	2406	1170	DZW500	2136
	20	1321	–	–	–	2750	610	BAA-2	3400	2800	1060	DZW800	3485

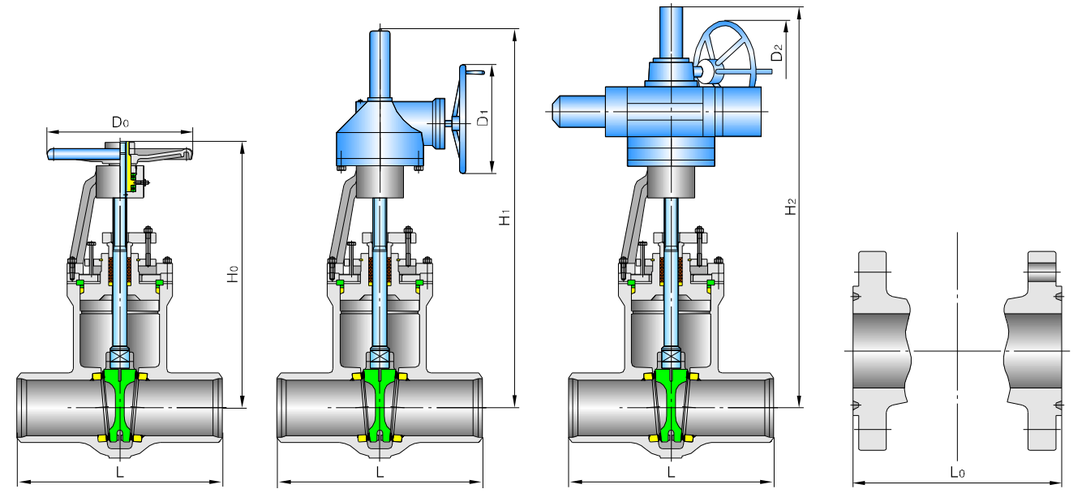

主要外形尺寸及重量 Main size of outside & weight

型号Model：PsZ41H、PsZ41Y、PsZ541H、PsZ541Y、PsZ941H、PsZ941Y　法兰连接 Flanged ends (RTJ)

传动方式 Driving			手动 Hand operated			齿轮动 Gear operated				电动 Electric driving			
Class	NPS (in)	L_0	H_0	D_0	重量 Weight (kg)	H_1	D_1	齿轮装置 Gear devlce	重量 Weight (kg)	H_2	D_2	电动装置 Electric driving	重量 Weight (kg)
1500	2	371	590	300	100	–	–	–	–	715	590	DZW30A	–
	3	473	711	350	130	–	–	–	–	736	590	DZW45A	210
	4	549	774	450	200	–	–	–	–	831	810	DZW60A	290
	6	711	–	–	–	1170	610	BA-2	544	1054	830	DZW120	560
	8	841	–	–	–	1370	610	BA-2	825	1422	870	DZW180	980
	10	1000	–	–	–	1655	610	BA-2	1375	1714	870	DZW250	1470
	12	1146	–	–	–	1810	610	BA-2	2085	1905	1170	DZW350	2220
	14	1276	–	–	–	1981	610	BAA-2	2940	1990	1170	DZW500	2970
	16	1407	–	–	–	2108	610	BAA-2	3790	2210	1060	DZW800	3900
	20	1686	–	–	–	2387	610	BAA-2	5130	2432	1060	DZW1000	5250

型号Model：PsZ61H、PsZ61Y、PsZ561H、PsZ561Y、PsZ961H、PsZ961Y　对焊连接 Butt welding ends

传动方式 Driving			手动 Hand operated			齿轮动 Gear operated				电动 Electric driving			
Class	NPS (in)	L	H_0	D_0	重量 Weight (kg)	H_1	D_1	齿轮装置 Gear devlce	重量 Weight (kg)	H_2	D_2	电动装置 Electric driving	重量 Weight (kg)
1500	2	368	550	250	89	–	–	–	–	715	590	DZW30A	–
	3	470	620	350	110	–	–	–	–	736	590	DZW45A	185
	4	546	750	400	180	–	–	–	–	831	810	DZW60A	268
	6	705	–	–	–	1170	610	BA-2	370	1054	830	DZW120	472
	8	832	–	–	–	1370	610	BA-2	610	1422	870	DZW180	754
	10	991	–	–	–	1655	610	BA-2	1300	1714	870	DZW250	1411
	12	1130	–	–	–	1810	610	BA-2	2000	1905	1170	DZW350	2133
	14	1257	–	–	–	1981	610	BAA-2	2900	1990	1170	DZW500	2912
	16	1384	–	–	–	2108	610	BAA-2	3490	2210	1060	DZW800	3516
	20	1664	–	–	–	2387	610	BAA-2	4800	2432	1060	DZW1000	4922

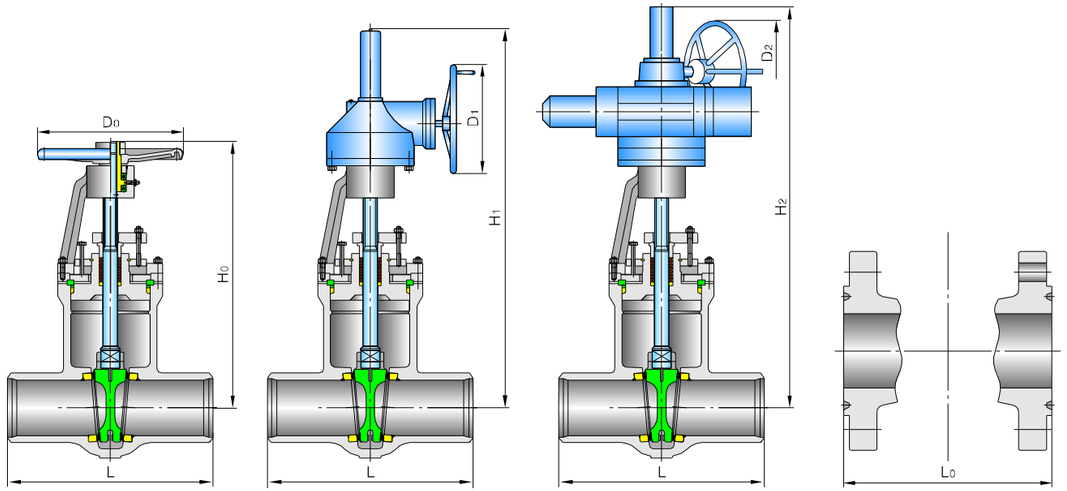

主要外形尺寸及重量 Main size of outside & weight

型号Model：PsZ41H、PsZ41Y、PsZ541H、PsZ541Y、PsZ941H、PsZ941Y　法兰连接 Flanged ends (RTJ)

传动方式 Driving			手动 Hand operated			齿轮动 Gear operated				电动 Electric driving			
Class	NPS (in)	L	H_0	D_0	重量 Weight (kg)	H_1	D_1	齿轮装置 Gear devlce	重量 Weight (kg)	H_2	D_2	电动装置 Electric driving	重量 Weight (kg)
2500	2	454	570	450	185	–	–	–	–	–	–	–	–
	3	584	596	500	215	–	–	–	–	654	830	DZW90	315
	4	683	698	600	335	–	–	–	–	781	830	DZW120	445
	6	927	–	–	–	876	610	BAA-2	890	977	870	DZW180	970
	8	1038	–	–	–	1493	610	BAA-2	1420	1523	870	DZW250	1520
	10	1292	–	–	–	1600	610	BAA-2	2560	1645	1170	DZW350	2630
	12	1445	–	–	–	1752	610	BAA-2	3740	1802	1170	DZW500	3823

型号Model：PsZ61H、PsZ61Y、PsZ561H、PsZ561Y、PsZ961H、PsZ961Y　对焊连接 Butt welding ends

传动方式 Driving			手动 Hand operated			齿轮动 Gear operated				电动 Electric driving			
Class	NPS (in)	L	H_0	D_0	重量 Weight (kg)	H_1	D_1	齿轮装置 Gear devlce	重量 Weight (kg)	H_2	D_2	电动装置 Electric driving	重量 Weight (kg)
2500	2	451	502	450	110	–	–	–	–	–	–	–	–
	3	578	596	500	135	654	610	BA-2	203	683	830	DZW90	199
	4	673	698	600	215	781	610	BA-2	305	806	830	DZW120	294
	6	914	–	–	–	977	610	BAA-2	650	1024	870	DZW180	664
	8	1022	–	–	–	1493	610	BAA-2	900	1508	870	DZW250	924
	10	1270	–	–	–	1600	610	BAA-2	1600	1620	1170	DZW350	1674
	12	1422	–	–	–	1752	610	BAA-2	2300	1790	1170	DZW500	2312

产品采用标准 Technical specification

结构形式 Structural formation	栓接阀盖明杆支架结构 Bolt (Weld)-jointed bonnet outside stem yoke structure
驱动方式 Driving manner	手动 Hand-operated
设计标准 Design standard	API602、BS5352
结构长度 Face to face	ASME B16.10
连接法兰 Flanged ends	ASME B16.5
试验和检验 Test & inspection	API 598

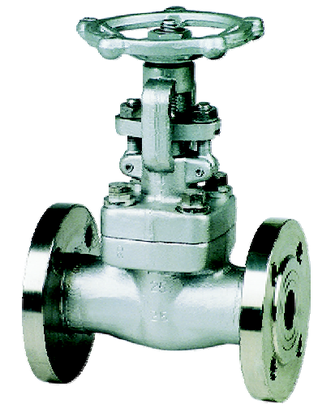

主要零件材料 Major parts material form

序号 No.	零件名称 Part name	材 质 Material
1	法兰 Flange	ASTM A105 ASTM A182-F11、F22、F5、F9 ASTM A182-F304、F316、F321、F304L、F316L
2	阀体 Body	ASTM A105 ASTM A182-F11、F22、F5、F9 ASTM A182-F304、F316、F321、F304L、F316L
3	阀座 Seat	ASTM A105 ASTM A182-F11、F22、F5、F9 ASTM A182-F304、F316、F321、F304L、F316L
4	闸板 Gate disc	ASTM A105 ASTM A182-F11、F22、F5、F9 ASTM A182-F304、F316、F321、F304L、F316L
5	阀杆 Stem	ASTM A182Gr.F6a、ASTM A182F22 ASTM A182-F304、F316、F321、F304L、F316L
6	垫片 Gasket	柔性石墨+不锈钢 Graphite & stainless steel
7	阀盖 Bonnet	ASTM A105 ASTM A182-F11、F22、F5、F9 ASTM A182-F304、F316、F321、F304L、F316L
8	螺栓 Bolt	ASTM A193-B7、A320-B8、F321、F304L、F316L
9	填料 Packing	柔性石墨 Graphite
10	填料压套 Packing press-sleeve	ASTM A182Gr.F6a、ASTM A182F22 ASTM A182-F304、F316、F321、F304L、F316L
11	填料压盖 Packing gland	ASTM A216-WCB ASTM A351-CF8、CF8M、CF8C、CF3、CF3M
12	阀杆螺母 Valve stem nut	铜合金 Copper alloy
13	手轮 Handwheel	ASTM A47-32510

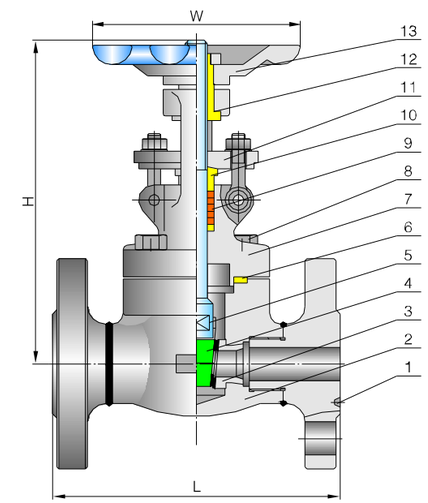

主要外形尺寸及重量 Main size of outside & weight

型号Model：(Hs、Ps)Z11H、(Hs、Ps)Z11Y、(Hs、Ps)Z41H、(Hs、Ps)Z41Y、(Hs、Ps)Z61H、(Hs、Ps)Z61Y

Class		150					300					600				
DN		L		H①	W	重量 Weight (kg)	L		H①	W	重量 Weight (kg)	L		H①	W	重量 Weight (kg)
mm	in	RF	RTJ				RF	RTJ				RF	RTJ			
15	1/2	108	119	160	100	4.5	140	151	160	100	4.8	165	163.5	160	100	5.8
20	3/4	117.5	130	165	100	5.1	152.5	165	165	100	6.2	190.5	190.5	165	100	7.5
25	1	127	140	192	125	8.5	165	178	192	125	9.4	216	216	192	125	10.3
32	1 1/4	140	153	220	160	11.5	178	191	220	160	14.2	229	229	220	160	16.3
40	1 1/2	165	178	245	160	11.2	190.5	203	245	160	15.5	241	241	245	160	17.5
50	2	178	216	285	180	20	216	232	285	180	23.5	292	295	285	180	28.4

注：①H为阀门全开时的高度。Notes: H represents the height in full opening condition of valve.

产品采用标准 Technical specification

结构形式 Structural formation	栓接阀盖明杆支架结构 Bolt (Weld)-jointed bonnet outside stem yoke structure
驱动方式 Driving manner	手动 Hand-operated
设计标准 Design standard	API602、BS5352
螺纹端 Thread ends	ASME B1.20.1
承插焊端 Socket welded ends	ASME B16.11
试验和检验 Test & inspection	API 598

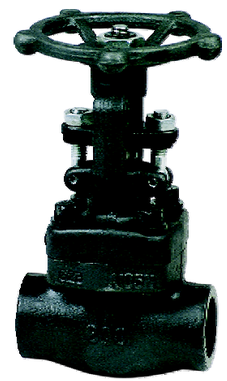

主要零件材料 Major parts material form

序号 No.	零件名称 Part name	材 质 Material
1	阀体 Body	ASTM A105 ASTM A182-F11、F22、F5、F9 ASTM A182-F304、F316、F321、F304L、F316L
2	阀座 Seat	ASTM A105 ASTM A182-F11、F22、F5、F9 ASTM A182-F304、F316、F321、F304L、F316L
3	闸板 Gate disc	ASTM A105 ASTM A182-F11、F22、F5、F9 ASTM A182-F304、F316、F321、F304L、F316L
4	阀杆 Stem	ASTM A182Gr.F6a、ASTM A182F22 ASTM A182-F304、F316、F321、F304L、F316L
5	垫片 Gasket	柔性石墨+不锈钢 Graphite & stainless steel
6	阀盖 Bonnet	ASTM A105 ASTM A182-F11、F22、F5、F9 ASTM A182-F304、F316、F321、F304L、F316L
7	螺栓 Bolt	ASTM A193-B7、A320-B8、F321、F304L、F316L
8	填料 Packing	柔性石墨 Graphite
9	填料压盖 Packing gland	ASTM A216-WCB ASTM A351-CF8、CF8M、CF8C、CF3、CF3M
10	阀杆螺母 Valve stem nut	铜合金 Copper alloy
11	手轮 Handwheel	ASTM A47-32510

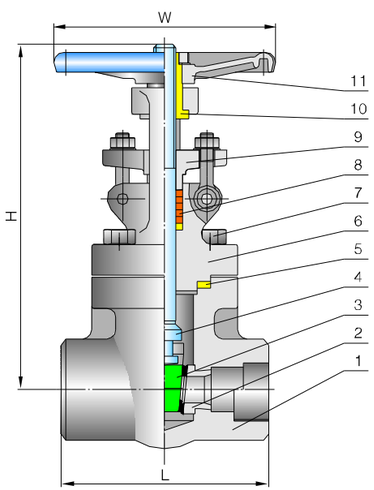

主要外形尺寸及重量 Main size of outside & weight

型号Model：(Hs、Ps)Z11H、(Hs、Ps)Z11Y、(Hs、Ps)Z41H、(Hs、Ps)Z41Y、(Hs、Ps)Z61H、(Hs、Ps)Z61Y

Class				800				1500			
DN				尺寸 Dimensions (mm)			重量 Weight (kg)	尺寸 Dimensions (mm)			重量 Weight (kg)
缩径Reduced bore		全径 Full bore									
mm	in	mm	in	L	H①	W		L	H①	W	
15	1/2	10	3/8	80	160	100	1.9	111	203	125	4.2
20	3/4	15	1/2	92	165	100	2.1	111	203	125	4.6
25	1	20	3/4	111	192	125	3.2	115	216	160	6.2
32	1 1/4	25	1	120	220	160	6.9	120	235	160	8.2
40	1 1/2	32	1 1/4	120	245	160	6.9	140	275	180	11.0
50	2	40	1 1/2	140	285	180	10.4	162	320	200	15.8
		50	2	172	392	200	15.8	180	368	250	24.5

注：①H为阀门全开时的高度。Notes: H represents the height in full opening condition of valve.

产品采用标准 Technical specification

结构形式 Structural formation	焊接阀盖明杆支架结构 Weld-jointed bonnet outside stem yoke structure
驱动方式 Driving manner	手动 Hand-operated
设计标准 Design standard	API602、BS5352
螺纹端 Thread ends	ASME B1.20.1
承插焊端 Socket welded ends	ASME B16.11
试验和检验 Test & inspection	API 598

主要零件材料 Major parts material form

序号 No.	零件名称 Part name	材 质 Material
1	阀体 Body	ASTM A105 ASTM A182-F11、F22、F5、F9 ASTM A182-F304、F316、F321、F304L、F316L
2	阀座 Seat	ASTM A105 ASTM A182-F11、F22、F5、F9 ASTM A182-F304、F316、F321、F304L、F316L
3	闸板 Wedge	ASTM A105 ASTM A182-F11、F22、F5、F9 ASTM A182-F304、F316、F321、F304L、F316L
4	阀杆 Stem	ASTM A182Gr.F6a、ASTM A182F22 ASTM A182-F304、F316、F321、F304L、F316L
5	阀盖 Bonnet	ASTM A105 ASTM A182-F11、F22、F5、F9 ASTM A182-F304、F316、F321、F304L、F316L
6	填料 Packing	柔性石墨 Graphite
7	填料压套 Packing press-sleeve	ASTM A182Gr.F6a、ASTM A182F22 ASTM A182-F304、F316、F321、F304L、F316L
8	填料压盖 Packing gland	ASTM A216-WCB ASTM A351-CF8、CF8M、CF8C、CF3、CF3M
9	阀杆螺母 Valve stem nut	铜合金 Copper alloy
10	手轮 Hand wheel	ASTM A47-32510

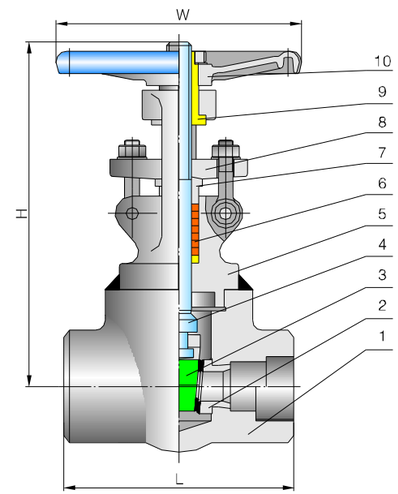

主要外形尺寸及重量 Main size of outside & weight

型号Model：(Hs、Ps)Z11H、(Hs、Ps)Z11Y、(Hs、Ps)Z41H、(Hs、Ps)Z41Y、(Hs、Ps)Z61H、(Hs、Ps)Z61Y

Class				2500			
DN				尺寸 Dimensions (mm)			
缩径Reduced bore		全径 Full bore					
mm	in	mm	in	L	H①	W	重量 Weight (kg)
15	1/2	10	3/8	111	185	125	5.2
20	3/4	15	1/2	127	215	140	5.5
25	1	20	3/4	127	245	160	7.4
32	1 1/4	25	1	127	276	160	9.5
40	1 1/2	32	1 1/4	140	276	180	9.8
50	2	40	1 1/2	210	340	200	19.5
		50	2	230	405	240	29

注：①H为阀门全开时的高度。Notes: H represents the height in full opening condition of valve.

卓越品质·成就方圆

Excellent quality makes
Fangyuan a great achievement

止回阀系列

Check valve series

旋启式止回阀

升降式止回阀

双瓣对夹式止回阀

锻钢止回阀

锻钢止回阀

旋启式止回阀

锻钢止回阀

FYV

旋启式止回阀

单瓣对夹式止回阀

单瓣对夹式止回阀

双瓣对夹式止回阀

型号编制说明 Model schedule illustration

□ □ □ □ □ — □ □

- 阀体材料代号 Body material code
- 压力等级代号 Pressure grade code
- 密封面材质代号 Sealing formation code
- 结构形式代号 Design feature code
- 连接形式代号 Connecting type code
- 阀门类型代号 Valve type code
- 结构特征代号 Feature code

● 结构特征代号：栓接阀盖结构(省略)　Ps—压力密封结构
Feature code: Bolt-jointed bonnet structure omitted　Ps—Pressure sealed structure

● 阀门类型代号：H—止回阀
Valve type code: H—Check valve

● 连接形式代号：1—内螺纹　2—外螺纹　4—法兰　6—焊接　7—对夹　8—承插焊
Connecting type code: 1—Interior whorl　2—Other whorl　4—Flange　6—Welding　7—To inserting　8—Bear and insert welding

● 结构形式代号：1—升降式　2—升降立式　4—单瓣旋启式　6—双瓣旋启式
Design feature code: 1—Lifting type　2—Lifting vertical type　4—Single-disc swing type　6—Dual-disc swing type

● 密封面材质代号：Y—硬质合金　H—合金钢　X—橡胶　F—聚四氟乙烯
Sealing formation code: Y—Hard alloy　H—Alloy steel　X—Rubber　F—Polytetrafluoroethylene (PTFE)

● 压力等级代号：公称压力为MPa的10倍、磅级为实际数
Pressure grade code: The 10 times of the nominal pressure MPa, pound grade io practical number

● 阀体材料代号(国标材质代号与下列相应材质代号等同)：
(1)铸造阀体：C—WCB　I—WC6、ZG1Cr5Mo　V—WC9、ZG20CrMoV　P—CF8、ZG1Cr18Ni9Ti
R—CF8M、ZG1Cr18Ni12Mo2Ti　S—CF3　L—CF3M　F—LCB　N—LC3
(2)锻造阀体：C—A105　E—LF2　A—F11　V—F22　P—F304　R—F316　S—F304L　L—F316L
Body material code: (1) Cast the valve body: C—WCB　I—WC6、ZG1Cr5Mo　V—WC9、ZG20CrMoV　P—CF8、ZG1Cr18Ni9Ti
R—CF8M、ZG1Cr18Ni12Mo2Ti　S—CF3　L—CF3M　F—LCB　N—LC3
(2)Forge the valve body: C—A105　E—LF2　A—F11　V—F22　P—F304　R—F316　S—F304L　L—F316L

产品结构特点 Products design features

止回阀适用于压力PN1.6～16.0MPa(Class150～2500)，工作温度-196～60℃的石油、化工、制药、化肥、电力行业等各种工况的管路上，防止介质的倒流。

Check valves are used in pipes under pressures between PN1.6～16.0MPa(Class150～2500Lb), working temperatures -196～60℃, They are used in industries include oil, chemistry, pharmaceutical, fertilizer, and power gene-ration to prevent the backward flux of the media.

其主要结构特点有：

The main structure features include:

1、产品结构合理、密封可靠、性能优良、造型美观。
The products feature a reasonable structure, reliable seal, good performance and nice modeling.

2、产品可根据不同的工况选择软质密封或硬质密封。密封面堆焊Co基硬质合金，耐磨、耐蚀、抗擦伤性能更好，使用寿命长。
Either soft or hard seal can be selected for the product upon different working conditions.The sealing face is built up with Co-based carbide alloy, leaving a better wearability, corrosion and scrap resistance and a longer duration.

3、开启压力小，阀瓣在很小的压差下就能完全打开。
Small opening pressure, the disc can be opened fully with a very small pressure differential.

4、内装式的销轴结构，减小外泄漏点，使用可靠。
Inside-set bolt-bearing structure reduces leakage and reliable use.

5、公称压力≥16.0MPa(Class1500)中腔采用自紧式密封结构，密封性能随压力升高而增强，保证了密封性能。
PN≥16.0Mpa (class1500), the middle cavity uses a self-tightening sealing structure to have the sealing performance reinforced along with the pressure rise so as to ensure the sealing performance.

6、零件材质及法兰、对焊端尺寸可根据实际工况或用户要求合理选配，满足各种工程需要。
Different parts materials and different sizes for flange, butt-welding are available for sensible combination according to different working facts and customers' requirements.

产品主要参数 Main parameter of the products

基本型号 Serial models	(Ps)H44H(Y)、(Ps)H64H(Y)、(Ps)H41H(Y)、(Ps)H61H(Y)、(Ps)H42H(Y)、(Ps)H62H(Y) (Ps)H74H(Y)、(Ps)H71H(Y)、(Ps)H76H(Y)、(Ps)H72H(Y)
压力等级范围 Pressure grade range	PN1.6～42.0MPa (Class150～2500)
通径范围 Drift diameter range	DN15～1000mm(1/2"～40")

产品性能规范 Products performance specification

压力等级 Pressure		常温试验压力(MPa) Testing pressure at constant temperature (Mpa)		适用温度 Applicable temperature	适用介质 Applicable medium
		壳体试验 The shell testing	密封试验 Seal and test		
公称压力 (MPa) Nominal rating pressure (PN)	1.6	2.4	1.76	-196～600℃	水、油品、蒸汽等 Water , oil , steam ,etc.
	2.5	3.75	2.75		
	4.0	6.0	4.4		
	6.4	9.6	7.04		
	10.0	15.0	11.0		
	16.0	24.0	17.6		
	25.0	37.5	27.5		
磅级(Lb) Pound grade (Class)	150	3.0	2.2		
	300	7.5	5.5		
	600	15.0	11.0		
	900	22.5	16.5		
	1500	37.5	27.5		
	2500	63.0	46.2		

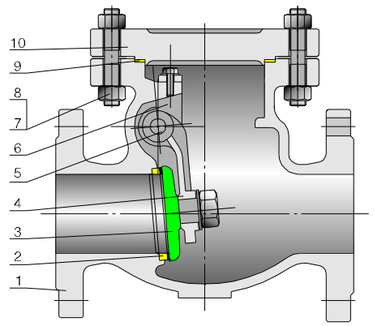

产品采用标准 Technical specification

结构形式 Structural formation	栓接阀盖旋启式止回阀 Bolt-jointed bonnet swing type check valve	
设计依据 Design reference	GB	API
设计标准 Design standard	GB/T 12236	API 6D
结构长度 Face to face	GB/T 12221	API 6D、ASME B16.10
连接法兰 Flanged ends	JB/T 79	ASME B16.5
试验和检验 Test & inspection	JB/T9092	API 598

注：阀门连接法兰及对焊端尺寸可根据用户要求设计制造。
Notes: The sizes of valve connecting flange and butt-welding terminas can be designed according to customer's requirement.

主要零件材料 Major parts material form

序号 No.	零件名称 Part name	材质 Material	
		ASTM	GB
1	阀体 Body	WCB、WC1、WC6、WC9、C5 CF8、CF8M、CF8C、CF3、CF3M	WCB、WC1、WC6、WC9、C5 CF8、CF8M、CF8C、CF3、CF3M
2	阀座 Seat	A105、F11、F22、F5、F9 F304、F316、F321、F304L、F316L	25、1Cr13、2Cr13 1Cr18Ni9Ti、0Cr18Ni12Mo2Ti、20Cr1Mo1V、25Cr2MoV
3	阀瓣 Disc	WCB、WC1、WC6、WC9、C5 CF8、CF8M、CF8C、CF3、CF3M	WCB、WC1、WC6、WC9、C5 CF8、CF8M、CF8C、CF3、CF3M
4	摇杆 Rocker	WCB、WC1、WC6、WC9、C5 CF8、CF8M、CF8C、CF3、CF3M	WCB、WC1、WC6、WC9、C5 CF8、CF8M、CF8C、CF3、CF3M
5	销轴 Pivot	Gr.F6a、F22 F304、F316、F321、F304L、F316L	1Cr13、2Cr13 1Cr18Ni9Ti、0Cr18Ni12Mo2Ti
6	连接架 Join the shelf	WCB、WC1、WC6、WC9、C5 CF8、CF8M、CF8C、CF3、CF3M	WCB、WC1、WC6、WC9、C5 CF8、CF8M、CF8C、CF3、CF3M
7	双头螺柱 Stud	A193-B7、A320-B8、A193-B8M	35CrMoA、25Cr2MoV、0Cr18Ni9、0Cr17Ni12Mo2
8	六角螺母 Six angle nuts	A194-2H、A194-8、A194-8M	45、35CrMoA、25Cr2MoV、0Cr18Ni9、0Cr17Ni12Mo2
9	垫片 Gasket	柔性石墨+不锈钢 Graphite & stainless steel	柔性石墨+不锈钢 Graphite & stainless steel
10	阀盖 Bonnet	WCB、WC1、WC6、WC9、C5 CF8、CF8M、CF8C、CF3、CF3M	WCB、WC1、WC6、WC9、C5 CF8、CF8M、CF8C、CF3、CF3M

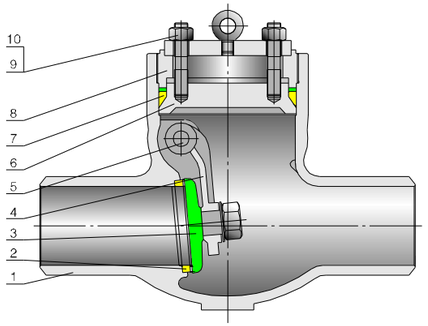

产品采用标准 Technical specification

结构形式 Structural formation	压力密封旋启式止回阀 Pressure sealed swing type check valve	
设计依据 Design reference	GB	API
设计标准 Design standard	GB/T 12236	API 600
结构长度 Face to face	GB/T 12221	ASME B16.10
连接法兰 Flanged ends	JB/T 79、GB/T 9113、HG20594	ASME B16.5
对焊端 Butt-welding ends	GB/T 12224	ASME B16.25
试验和检验 Test & inspection	JB/T9092	API 598

注：阀门连接法兰及对焊端尺寸可根据用户要求设计制造。
Notes: The sizes of valve connecting flange and butt-welding terminas can be designed according to customer's requirement.

主要零件材料 Major parts material form

序号 No.	零件名称 Part name	材质 Material	
		ASTM	GB
1	阀体 Body	WCB、WC1、WC6、WC9、C5 CF8、CF8M、CF8C、CF3、CF3M	WCB、WC1、WC6、WC9、C5 CF8、CF8M、CF8C、CF3、CF3M
2	阀瓣 Disc	WCB、WC1、WC6、WC9、C5 CF8、CF8M、CF8C、CF3、CF3M	WCB、WC1、WC6、WC9、C5 CF8、CF8M、CF8C、CF3、CF3M
3	阀座 Seat	A105、F11、F22、F5、F9 F304、F316、F321、F304L、F316L	25、1Cr18Ni9Ti、0Cr18Ni12Mo2Ti 20Cr1Mo1V、25Cr2MoV
4	摇杆 Rocker	WCB、WC1、WC6、WC9、C5 CF8、CF8M、CF8C、CF3、CF3M	WCB、WC1、WC6、WC9、C5 CF8、CF8M、CF8C、CF3、CF3M
5	销轴 Pivot	Gr.F6a、F22 F304、F316、F321、F304L、F316L	1Cr13、2Cr13 1Cr18Ni9Ti、0Cr18Ni12Mo2Ti
6	阀盖 Bonnet	A105、F11、F22、F5、F9 F304、F316、F321、F304L、F316L	25、1Cr18Ni9Ti、0Cr18Ni12Mo2Ti 20Cr1Mo1V、25Cr2MoV
7	密封圈 Sealing ring	柔性石墨 Graphite	柔性石墨 Graphite
8	压盖 Cover	WCB、WC1、WC6、WC9、C5 CF8、CF8M、CF8C、CF3、CF3M	WCB、WC1、WC6、WC9、C5 CF8、CF8M、CF8C、CF3、CF3M
9	双头螺柱 Stud	A193-B7、A320-B8、A193-B8M	35CrMoA、25Cr2MoV、0Cr18Ni9、0Cr17Ni12Mo2
10	六角螺母 Six angle nuts	A194-2H、A194-8、A194-8M	45、35CrMoA、25Cr2MoV、0Cr18Ni9、0Cr17Ni12Mo2

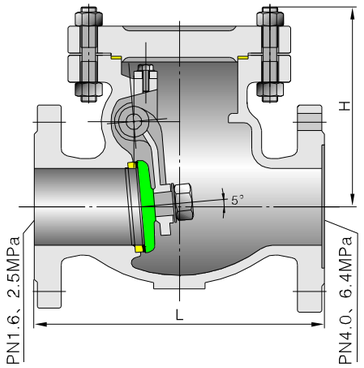

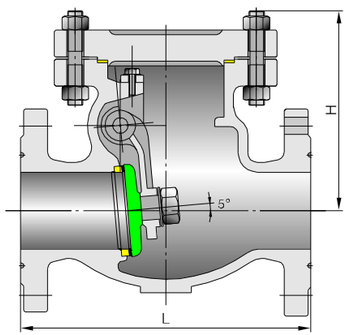

PN10.0MPa

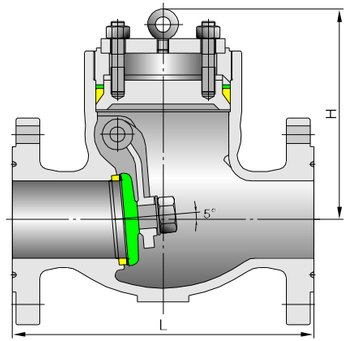

PN16.0、25.0MPa

主要外形尺寸及重量 Main size of outside & weight

型号Model：H44H、H44Y

PN (MPa)	DN (mm)	尺寸 Dimensions (mm) L	尺寸 Dimensions (mm) H	重量 Weight (kg)	PN (MPa)	DN (mm)	尺寸 Dimensions (mm) L	尺寸 Dimensions (mm) H	重量 Weight (kg)	PN (MPa)	DN (mm)	尺寸 Dimensions (mm) L	尺寸 Dimensions (mm) H	重量 Weight (kg)
1.6	50	230	165	23	4.0	50	230	180	27	10.0	50	300	195	43
	65	290	180	28		65	290	195	33		65	340	213	52
	80	310	190	35		80	310	195	37		80	380	240	75
	100	350	208	40		100	350	220	56		100	430	270	112
	150	480	270	81		150	480	273	105		150	550	365	220
	200	600	295	96		200	600	352	140		200	650	425	345
	250	730	337	175		250	730	413	200		250	775	486	475
	300	850	386	265		300	850	432	392	16.0	50	300	255	52
	350	980	430	364		350	980	455	396		65	340	285	62
	400	1100	475	495		400	1100	562	502		80	380	324	113
	500	1250	565	590		500	1250	620	645		100	430	359	165
2.5	50	230	180	25	6.4	50	300	195	32		150	550	433	270
	65	290	195	32		65	340	213	45		200	650	478	324
	80	310	195	35		80	380	213	50		250	775	520	375
	100	350	220	55		100	430	240	75	25.0	50	368	315	65
	150	480	273	104		150	550	302	158		65	419	348	79
	200	600	352	138		200	650	362	220		80	470	386	95
	250	730	413	198		250	775	410	346		100	546	410	172
	300	850	432	388		300	900	468	476		150	705	565	275
	350	980	455	390		350	1025	520	630		200	832	320	325
	400	1100	562	498		400	1150	572	886		250	991	676	395
	500	1250	620	643		500	1400	625	1030					

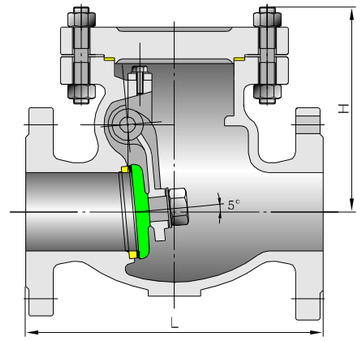

Class150、300

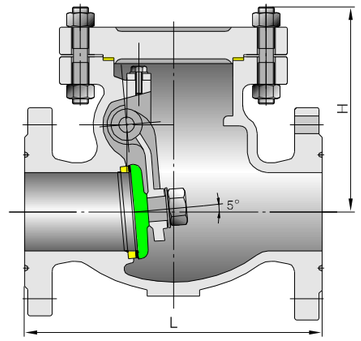

Class600

主要外形尺寸及重量 Main size of outside & weight

型号Model：H44H、H44Y

Class	DN (mm)	NPS (in)	尺寸 Dimensions (mm) L	尺寸 Dimensions (mm) H	重量 Weight (kg)
150	50	2	203	165	17
	65	2 1/2	216	182	26
	80	3	241	195	32
	100	4	292	208	45
	150	6	356	260	75
	200	8	495	295	135
	250	10	622	350	200
	300	12	699	405	275
	350	14	787	446	385
	400	16	864	493	442
	450	18	978	515	630
	500	20	978	540	760

Class	DN (mm)	NPS (in)	尺寸 Dimensions (mm) L	尺寸 Dimensions (mm) H	重量 Weight (kg)
300	50	2	267	175	22
	65	2 1/2	292	186	24
	80	3	318	212	38
	100	4	356	238	52
	150	6	445	302	86
	200	8	533	362	165
	250	10	622	392	204
	300	12	711	440	278
	350	14	838	460	402
	400	16	864	530	545
	450	18	978	582	683
	500	20	1016	615	862
600	50	2	295	200	32
	65	2 1/2	333	219	42
	80	3	359	232	61
	100	4	435	282	112
	150	6	562	330	205
	200	8	664	378	385
	250	10	791	452	575
	300	12	841	575	775
	350	14	892	590	982
	400	16	994	635	1056

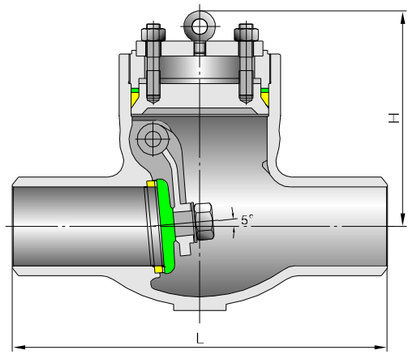

Class600、900、1500、2500

主要外形尺寸及重量 Main size of outside & weight

型号Model：(Ps)H64H、(Ps)H64Y

Class	DN (mm)	NPS (in)	尺寸 Dimensions (mm)		重量 Weight (kg)
			L	H	
600	50	2	292	225	29
	65	2 1/2	330	240	35
	80	3	356	254	48
	100	4	432	279	67
	150	6	559	368	110
	200	8	660	393	205
	250	10	787	457	325
	300	12	838	584	480
	350	14	889	609	600
	400	16	991	685	800
	450	18	1092	736	1490
	500	20	1194	762	1675
	600	24	1397	889	2300
900	50	2	368	225	48
	65	2 1/2	419	240	65
	80	3	381	254	70
	100	4	457	279	100
	150	6	610	381	245
	200	8	737	533	425
	250	10	838	558	675
	300	12	965	609	900
	350	14	1029	736	1125
	400	16	1130	762	1600
	450	18	1219	863	2000
	500	20	1321	939	2700
	600	24	1549	1066	3500

Class	DN (mm)	NPS (in)	尺寸 Dimensions (mm)		重量 Weight (kg)
			L	H	
1500	50	2	368	225	48
	65	2 1/2	419	240	65
	80	3	470	254	90
	100	4	546	279	115
	150	6	705	405	250
	200	8	832	567	470
	250	10	991	585	800
	300	12	1130	630	1350
	350	14	1257	750	1800
	400	16	1384	787	2200
	450	18	1537	885	2600
	500	20	1664	960	2700
	600	24	1943	1120	4100
2500	50	2	451	225	80
	65	2 1/2	508	249	102
	80	3	578	254	120
	100	4	673	279	220
	150	6	914	420	540
	200	8	1022	570	920
	250	10	1270	1010	1692
	300	12	1422	1160	2296

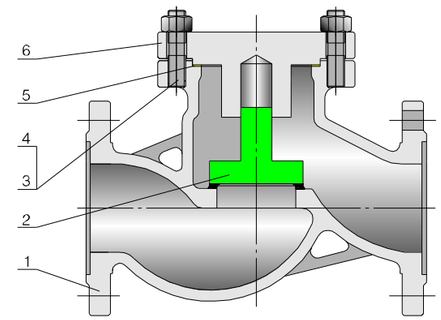

产品采用标准 Technical specification

结构形式 Structural formation	螺柱阀盖升降式止回阀 Spiral shell's post bonnet lifting type check valve	
设计依据 Design reference	GB	API
设计标准 Design standard	GB/T 12235	BS1868
结构长度 Face to face	GB/T 12221	ASME B16.10
连接法兰 Flanged ends	JB/T 79	ASME B16.5
试验和检验 Test & inspection	JB/T9092	API 598

注：阀门连接法兰及对焊端尺寸可根据用户要求设计制造。
Notes: The sizes of valve connecting flange and butt-welding terminas can be designed according to customer's requirement.

主要零件材料 Major parts material form

序号 No.	零件名称 Part name	材质 Material	
		ASTM	GB
1	阀体 Body	WCB、WC1、WC6、WC9、C5 CF8、CF8M、CF8C、CF3、CF3M	WCB、WC1、WC6、WC9、C5 CF8、CF8M、CF8C、CF3、CF3M
2	阀瓣 Disc	WCB、WC1、WC6、WC9、C5 CF8、CF8M、CF8C、CF3、CF3M	WCB、WC1、WC6、WC9、C5 CF8、CF8M、CF8C、CF3、CF3M
3	双头螺柱 Stud	A193-B7、A320-B8、A193-B8M	35CrMoA、25Cr2MoV、0Cr18Ni9、0Cr17Ni12Mo2
4	六角螺母 Six angle nuts	A194-2H、A194-8、A194-8M	45、35CrMoA、25Cr2MoV、0Cr18Ni9、0Cr17Ni12Mo2
5	垫片 Gasket	柔性石墨+不锈钢 Graphite & stainless steel	柔性石墨+不锈钢 Graphite & stainless steel
6	阀盖 Bonnet	A105、F11、F22、F5、F9 F304、F316、F321、F304L、F316L	25、1Cr18Ni9Ti、0Cr18Ni12Mo2Ti 20Cr1Mo1V、25Cr2MoV

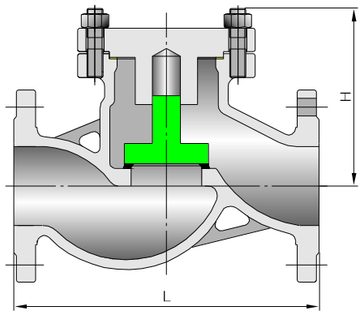

PN1.6、2.5MPa

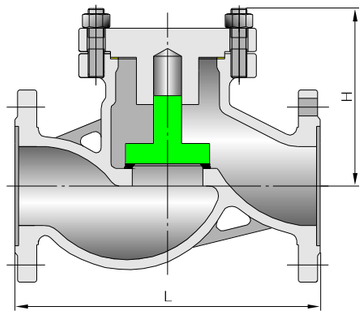

PN≥4.0MPa

主要外形尺寸及重量 Main size of outside & weight

型号Model：H41H、H41Y

PN (MPa)	DN (mm)	尺寸 Dimensions (mm)		重量 Weight (kg)
		L	H	
1.6	50	230	115	20
	65	290	140	24
	80	310	175	30
	100	350	203	42
	125	400	228	59
	150	480	250	84
	200	600	285	100
2.5	50	230	115	21
	65	290	140	25
	80	310	175	31
	100	350	203	42
	125	400	228	60
	150	480	250	86
	200	600	285	102
4.0	50	230	150	17
	65	290	160	22
	80	310	178	34
	100	350	203	42
	125	400	228	75
	150	480	265	105
	200	600	317	150

PN (MPa)	DN (mm)	尺寸 Dimensions (mm)		重量 Weight (kg)
		L	H	
6.4	50	300	175	30
	65	340	190	36
	80	380	208	48
	100	430	230	70
	125	500	265	102
	150	550	312	145
	200	650	353	198
10.0	50	300	175	30
	65	340	193	43
	80	380	238	65
	100	430	269	89
	125	500	313	102
	150	550	355	123
	200	650	403	148
16.0	50	300	175	32
	65	340	193	46
	80	380	238	240
	100	430	269	273

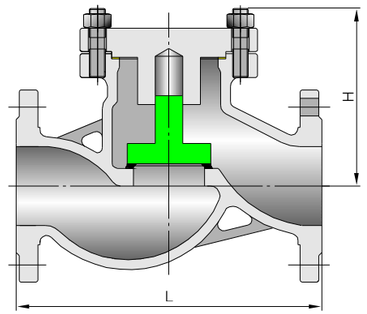

Class150、300

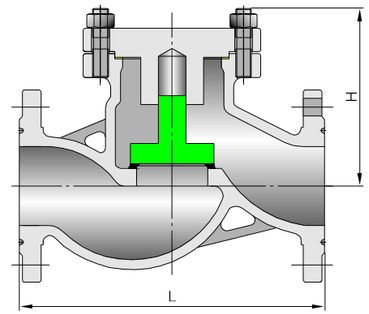

Class600、900

主要外形尺寸及重量 Main size of outside & weight

型号Model：H41H、H41Y

Class	DN (mm)	NPS (in)	尺寸 Dimensions (mm)		重量 Weight (kg)
			L	H	
150	50	2	203	165	17
	65	2 1/2	216	175	25
	80	3	241	190	29
	100	4	292	215	50
	150	6	356	265	85
	200	8	495	320	150
	250	10	622	365	240
	300	12	699	415	350
300	50	2	267	190	28
	65	2 1/2	292	205	33
	80	3	318	220	45
	100	4	356	245	70
	150	6	445	295	150
	200	8	533	330	230
	250	10	622	420	390
	300	12	711	480	520

Class	DN (mm)	NPS (in)	尺寸 Dimensions (mm)		重量 Weight (kg)
			L	H	
600	50	2	295	210	33
	65	2 1/2	333	230	43
	80	3	359	255	62
	100	4	435	295	113
	150	6	562	365	222
	200	8	664	420	390
	250	10	791	505	630
	300	12	841	545	871
900	50	2	371	235	120
	65	2 1/2	422	270	166
	80	3	384	302	176
	100	4	460	342	182
	150	6	613	425	403

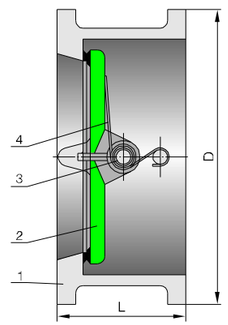

产品采用标准 Technical specification

结构形式 Structural formation	双瓣旋启式止回阀 Dual-disc swing type check valve
设计标准 Design standard	GB/T 12224
结构长度 Face to face	GB/T 15188.2
连接法兰 Flanged ends	JB/T 79、GB/T9113、HG20592
试验和检验 Test & inspection	JB/T9092

注：阀门连接法兰及对焊端尺寸可根据用户要求设计制造。
Notes: The sizes of valve connecting flange and butt-welding terminas can be designed according to customer's requirement.

主要零件材料 Major parts material form

序号 No.	零件名称 Part name	材质 Material
1	阀体 Body	WCB、CF8、CF8M、CF8C、CF3、CF3M
2	阀瓣 Disc	WCB、CF8、CF8M、CF8C、CF3、CF3M
3	销轴 Pivot	1Cr13、2Cr13、1Cr18Ni9Ti、0Cr18Ni12Mo2Ti
4	弹簧 Spring	4Cr13、60Si2Mn、1Cr18Ni9Ti、0Cr18Ni12Mo2Ti

主要外形尺寸及重量 Main size of outside & weight

型号Model：H76H、H76Y

PN (MPa)	DN (mm)	尺寸 Dimensions (mm) L	尺寸 Dimensions (mm) D	重量 Weight (kg)	PN (MPa)	DN (mm)	尺寸 Dimensions (mm) L	尺寸 Dimensions (mm) D	重量 Weight (kg)	PN (MPa)	DN (mm)	尺寸 Dimensions (mm) L	尺寸 Dimensions (mm) D	重量 Weight (kg)
1.0	50	60	109	2	1.6	50	60	109	2	2.5	50	60	109	2
	65	67	129	3		65	67	129	3		65	67	129	3
	80	73	144	4.2		80	73	144	4.2		80	73	144	4.2
	100	73	164	6.2		100	73	164	6.2		100	73	170	6.2
	125	86	194	7.5		125	86	194	7.5		125	86	197	9
	150	98	220	11.5		150	98	220	11.5		150	98	227	12.5
	200	127	275	20.2		200	127	275	20.2		200	127	287	23
	250	146	330	31		250	146	332	32		250	146	343	40
	300	181	380	48.2		300	181	387	51		300	181	403	55
	350	184	440	72.5		350	184	447	73		350	184	460	82
	400	190	492	104.5		400	190	498	108		400	191	518	118
	450	203	542	151		450	203	558	160		450	203	568	212
	500	219	597	180		500	219	620	200		500	219	624	240
	600	222	698	300		600	222	734	320		600	222	734	412

FYV Wafer type double disc swing check valve 对夹双瓣旋启式止回阀

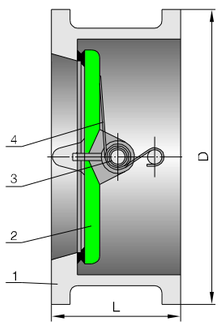

产品采用标准 Technical specification

结构形式 Structural formation	双瓣旋启式止回阀 Dual-disc swing type check valve
设计标准 Design standard	GB/T 12224
结构长度 Face to face	GB/T 15188.2
连接法兰 Flanged ends	JB/T 79、GB/T9113、HG20592
试验和检验 Test & inspection	JB/T9092

注：阀门连接法兰及对焊端尺寸可根据用户要求设计制造。
Notes: The sizes of valve connecting flange and butt-welding terminas can be designed according to customer's requirement.

主要零件材料 Major parts material form

序号 No.	零件名称 Part name	材质 Material
1	阀体 Body	WCB、CF8、CF8M、CF8C、CF3、CF3M
2	阀瓣 Disc	WCB、CF8、CF8M、CF8C、CF3、CF3M
3	销轴 Pivot	1Cr13、2Cr13、1Cr18Ni9Ti、0Cr18Ni12Mo2Ti
4	弹簧 Spring	4Cr13、60Si2Mn、1Cr18Ni9Ti、0Cr18Ni12Mo2Ti

主要外形尺寸及重量 Main size of outside & weight

型号Model：H76H、H76Y

PN (MPa)	DN (mm)	尺寸 Dimensions(mm) L	尺寸 Dimensions(mm) D	重量 Weight (kg)	PN (MPa)	DN (mm)	尺寸 Dimensions(mm) L	尺寸 Dimensions(mm) D	重量 Weight (kg)	PN (MPa)	DN (mm)	尺寸 Dimensions(mm) L	尺寸 Dimensions(mm) D	重量 Weight (kg)
4.0	50	60	109	3.5	6.4	50	60	115	3.5	10.0	50	60	122	4
	65	67	129	5		65	67	140	5		65	67	147	6
	80	73	144	7.2		80	73	150	7.2		80	73	157	8
	100	73	170	9.3		100	79	177	12		100	79	183	12
	125	86	197	16		125	105	213	22		125	105	220	21
	150	98	227	18		150	137	250	34		150	137	260	34
	200	127	293	30		200	161	313	48		200	161	324	48
	250	146	355	52		250	213	364	77		250	213	394	77
	300	181	420	87		300	229	424	112		300	229	458	112
	350	222	478	121						16.0	50	70	143	7
	400	232	549	162							65	83	163	10
											80	83	178	15
											100	102	210	25
											125	110	249	30
											150	159	282	43
											200	206	358	55

Wafer type double disc swing check valve 对夹双瓣旋启式止回阀

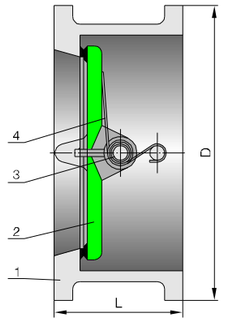

产品采用标准 Technical specification

结构形式 Structural formation	双瓣旋启式止回阀 Dual-disc swing type check valve
设计标准 Design standard	API 594
结构长度 Face to face	ASME B16.0
连接法兰 Flanged ends	ASME B16.5
试验和检验 Test & inspection	API 598

注：阀门连接法兰及对焊端尺寸可根据用户要求设计制造。
Notes: The sizes of valve connecting flange and butt-welding terminas can be designed according to customer's requirement.

主要零件材料 Major parts material form

序号 No.	零件名称 Part name	材质 Material
1	阀体 Body	ASTM A216-WCB、ASTM A351-CF8、CF8M、CF8C、CF3、CF3M
2	阀瓣 Disc	ASTM A216-WCB、ASTM A351-CF8、CF8M、CF8C、CF3、CF3M
3	销轴 Pivot	ASTM A182 Gr.F6a、ASTM A182 F22、ASTM A182-F304、F316、F321、F304L、F316L
4	弹簧 Spring	AISI 9260、AISI 6150、ASTM A182-F304、F316、F321、F304L、F316L

主要外形尺寸及重量 Main size of outside & weight

型号Model：H76H、H76Y

Class	DN (mm)	NPS (in)	尺寸 Dimensions(mm) L	尺寸 Dimensions(mm) D	重量 Weight (kg)
150	50	2	60	103	2
	65	2 1/2	67	122	3.2
	80	3	73	135	4
	100	4	73	173	6
	125	5	86	196	9
	150	6	98	222	12
	200	8	127	279	22
	250	10	146	339	38
	300	12	181	409	54
	350	14	184	450	80
	400	16	191	514	118
	450	18	203	549	210
	500	20	219	606	240
	600	24	222	717	410

Class	DN (mm)	NPS (in)	尺寸 Dimensions(mm) L	尺寸 Dimensions(mm) D	重量 Weight (kg)
300	50	2	60	110	3.5
	65	2 1/2	67	148	5
	80	3	73	248	7
	100	4	73	180	10
	125	5	86	215	18.5
	150	6	98	250	19
	200	8	127	307	33
	250	10	146	361	54
	300	12	181	422	88
	350	14	222	485	128
	400	16	232	539	169

Class	DN (mm)	NPS (in)	尺寸 Dimensions(mm) L	尺寸 Dimensions(mm) D	重量 Weight (kg)
600	50	2	60	110	3.5
	65	2 1/2	67	129	5
	80	3	73	148	7
	100	4	79	192	12
	125	5	105	240	22.5
	150	6	137	265	35
	200	8	165	319	45
	250	10	213	399	77
	300	12	229	456	110
	350	14	273	489	135
	400	16	305	562	163
900	50	2	70	142	6.5
	65	2 1/2	83	164	9
	80	3	83	167	14
	100	4	102	205	24
	150	6	159	288	43
	200	8	206	358	56

Wafer type piston-lift check valve 对夹连接升降式止回阀

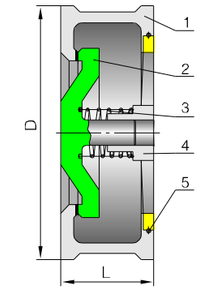

PN1.0、2.5MPa

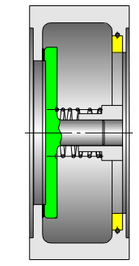

PN≥4.0MPa

产品采用标准 Technical specification

结构形式 Structural formation	对夹升降立式止回阀 Butt-clamped lifting vertical type check valve
设计标准 Design standard	GB/T 12224
结构长度 Face to face	GB/T 15188.2
连接法兰 Flanged ends	JB/T 79、GB/T9113、HG20592
试验和检验 Test & inspection	JB/T9092

注：阀门连接法兰及对焊端尺寸可根据用户要求设计制造。
Notes: The sizes of valve connecting flange and butt-welding terminas can be designed according to customer's requirement.

主要零件材料 Major parts material form

序号 No.	零件名称 Part name	材质 Material
1	阀体 Body	WCB、CF8、CF8M、CF8C、CF3、CF3M
2	阀瓣 Disc	WCB、CF8、CF8M、CF8C、CF3、CF3M
3	弹簧 Spring	4Cr13、60Si2Mn、1Cr18Ni9Ti、0Cr18Ni12Mo2Ti
4	压板 Plate	WCB、CF8、CF8M、CF8C、CF3、CF3M
5	挡圈 Lock ring	4Cr13、60Si2Mn、1Cr18Ni9Ti、0Cr18Ni12Mo2Ti

主要外形尺寸及重量 Main size of outside & weight

型号Model：H72H、H72Y

PN (MPa)	DN (mm)	尺寸 Dimensions(mm) L	尺寸 Dimensions(mm) D	重量 Weight (kg)
1.0 1.6	15	16	53	0.15
	20	19	63	0.25
	25	22	73	0.4
	32	28	84	0.55
	40	31.5	94	0.75
	50	40	109	1.2
	65	46	129	2.0
	80	50	144	2.6
	100	60	164	5.7
	125	90	194	10
	150	106	220	13

PN (MPa)	DN (mm)	尺寸 Dimensions(mm) L	尺寸 Dimensions(mm) D	重量 Weight (kg)
2.5	15	16	53	0.2
	20	19	63	0.3
	25	22	73	0.45
	32	28	84	0.6
	40	31.5	94	0.8
	50	40	109	1.2
	65	46	129	2.3
	80	50	144	3.0
	100	60	170	7.0
	125	90	197	12
	150	106	220	13

PN (MPa)	DN (mm)	尺寸 Dimensions(mm) L	尺寸 Dimensions(mm) D	重量 Weight (kg)
4.0	15	25	63	0.3
	20	31.5	74	0.4
	25	35.5	84	0.6
	32	40	90	1.0
	40	45	105	1.5
	50	56	115	2.0
	65	63	140	3.2
	80	71	150	7.2
	100	80	177	11
	125	110	213	18
	150	125	250	22

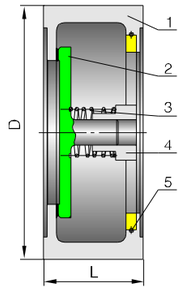

PN≥4.0MPa

产品采用标准 Technical specification

结构形式 Structural formation	对夹升降立式止回阀 Butt-clamped lifting vertical type check valve
设计标准 Design standard	GB/T 12224
结构长度 Face to face	GB/T 15188.2
连接法兰 Flanged ends	JB/T 79、GB/T9113、HG20592
试验和检验 Test & inspection	JB/T9092

注：阀门连接法兰及对焊端尺寸可根据用户要求设计制造。
Notes: The sizes of valve connecting flange and butt-welding terminas can be designed according to customer's requirement.

主要零件材料 Major parts material form

序号 No.	零件名称 Part name	材质 Material
1	阀体 Body	WCB、CF8、CF8M、CF8C、CF3、CF3M
2	阀瓣 Disc	WCB、CF8、CF8M、CF8C、CF3、CF3M
3	弹簧 Spring	4Cr13、60Si2Mn、1Cr18Ni9Ti、0Cr18Ni12Mo2Ti
4	压板 Plate	WCB、CF8、CF8M、CF8C、CF3、CF3M
5	挡圈 Lock ring	4Cr13、60Si2Mn、1Cr18Ni9Ti、0Cr18Ni12Mo2Ti

主要外形尺寸及重量 Main size of outside & weight

型号Model：H72H、H72Y

PN (MPa)	DN (mm)	尺寸 Dimensions(mm) L	尺寸 Dimensions(mm) D	重量 Weight (kg)	PN (MPa)	DN (mm)	尺寸 Dimensions(mm) L	尺寸 Dimensions(mm) D	重量 Weight (kg)	PN (MPa)	DN (mm)	尺寸 Dimensions(mm) L	尺寸 Dimensions(mm) D	重量 Weight (kg)
6.4	15	25	63	0.3	10.0	15	25	63	0.3	16.0	15	25	59	0.3
	20	31.5	74	0.4		20	31.5	74	0.4		20	31.5	70	0.4
	25	35.5	84	0.6		25	35.5	84	0.6		25	35.5	80	0.6
	32	40	90	1.0		32	40	90	1.0		32	40	93	1.0
	40	45	105	1.5		40	45	105	1.5		40	45	101	1.5
	50	56	115	2.0		50	56	122	2.2		50	56	143	2.2
	65	63	140	3.2		65	63	147	3.5		65	63	163	3.5
	80	71	150	7.2		80	71	157	7.5		80	71	178	7.5
	100	80	177	11		100	80	183	12		100	80	210	12
	125	110	213	18		125	110	220	18		125	110	249	19
	150	125	250	22		150	125	260	24		150	125	282	24

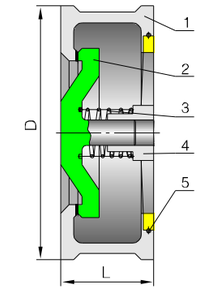

Class150～300

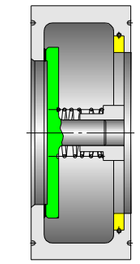

≥Class600

产品采用标准 Technical specification

结构形式 Structural formation	对夹升降立式止回阀 Butt-clamped lifting vertical type check valve
设计标准 Design standard	API 594
结构长度 Face to face	ASME B16.10
连接法兰 Flanged ends	ASME B16.5
试验和检验 Test & inspection	API 598

注：阀门连接法兰及对焊端尺寸可根据用户要求设计制造。
Notes: The sizes of valve connecting flange and butt-welding terminas can be designed according to customer's requirement.

主要零件材料 Major parts material form

序号 No.	零件名称 Part name	材质 Material
1	阀体 Body	ASTM A216-WCB、ASTM A351-CF8、CF8M、CF8C、CF3、CF3M
2	阀瓣 Disc	ASTM A216-WCB、ASTM A351-CF8、CF8M、CF8C、CF3、CF3M
3	弹簧 Spring	AISI 9260、AISI 6150、ASTM A182-F304、F316、F321、F304L、F316L
4	压板 Plate	ASTM A216-WCB、ASTM A351-CF8、CF8M、CF8C、CF3、CF3M
5	挡圈 Lock ring	AISI 9260、AISI 6150、ASTM A182-F304、F316、F321、F304L、F316L

主要外形尺寸及重量 Main size of outside & weight

型号Model：H72H、H72Y

Class		150			300			600			900		
DN (mm)	NPS (in)	尺寸 Dimensions(mm) L	尺寸 Dimensions(mm) D	重量 Weight (kg)	尺寸 Dimensions(mm) L	尺寸 Dimensions(mm) D	重量 Weight (kg)	尺寸 Dimensions(mm) L	尺寸 Dimensions(mm) D	重量 Weight (kg)	尺寸 Dimensions(mm) L	尺寸 Dimensions(mm) D	重量 Weight (kg)
15	1/2	16	47	0.2	25	53	0.23	25	53	0.25	25	63	0.3
20	3/4	19	57	0.3	31.5	65	0.36	31.5	65	0.38	31.5	69	0.4
25	1	22	66	0.45	35.5	72	0.52	35.5	72	0.55	35.5	78	0.6
32	1 1/4	28	75	0.6	40	81	0.75	40	81	0.8	40	88	1.0
40	1 1/2	31.5	85	0.8	45	95	1.1	45	95	1.2	45	98	1.5
50	2	40	103	1.2	56	110	1.95	56	110	2.0	56	142	2.5
65	2 1/2	46	122	2.3	63	129	2.9	63	129	2.0	63	164	4.0
80	3	50	135	3.0	71	148	5.5	71	148	6.0	71	167	8.0
100	4	60	173	7.0	80	180	9.0	80	192	10	80	205	13
125	5	90	196	12	110	215	15	110	240	17	110	247	20
150	6	106	222	15	125	250	20	125	265	22	125	288	25

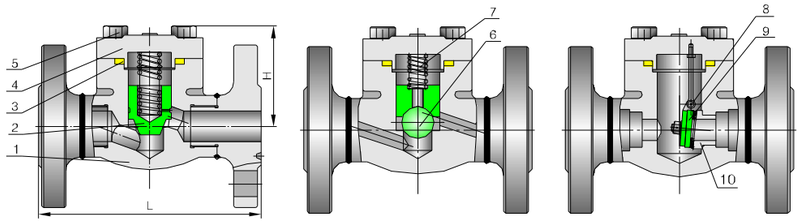

活塞式
Piston type

球形
Spherical

旋启式
Fasten the opening type

产品采用标准 Technical specification

结构形式 Structural formation	栓接阀盖升降式、栓接阀盖旋启式止回阀 Bolt-jointed bonnet lifting type, bolt-jointed bonnet swing type check valve
设计标准 Design standard	ASME B16.34、BS5352
结构长度 Face to face	ASME B16.10
法兰连接 Flanged ends	ASME B16.5
螺纹端 Thread ends	ASME B1.20.1
承插焊端 Socket welded ends	ASME B16.11
试验和检验 Test & inspection	API 598

注：阀门连接法兰及对焊端尺寸可根据用户要求设计制造。
Notes: The sizes of valve connecting flange and butt-welding terminas can be designed according to customer's requirement.

主要零件材料 Major parts material form

序号 No.	零件名称 Part name	材质 Material
1	阀体 Body	ASTM A105、ASTM A182-F11、F22、F5、F9、ASTM A182-F304、F316、F321、F304L、F316L
2	阀瓣 Disc	ASTM A105、ASTM A182-F11、F22、F5、F9、ASTM A182-F304、F316、F321、F304L、F316L
3	弹簧 Spring	柔性石墨+不锈钢 Graphite & stainless steel
4	阀盖 Bonnet	ASTM A105、ASTM A182-F11、F22、F5、F9、ASTM A182-F304、F316、F321、F304L、F316L
5	螺栓 Bolt	ASTM A193-B7、A320-B8、A193-B8M
6	球 Ball	ASTM A105、ASTM A182-F11、F22、F5、F9、ASTM A182-F304、F316、F321、F304L、F316L
7	弹簧 Spring	AISI 9260、AISI 6150、ASTM A182-F304、F316、F321、F304L、F316L
8	摇杆 Rocker	ASTM A182 Gr.F6a、ASTM A182 F22、ASTM A182-F304、F316、F321、F304L、F316L
9	销轴 Pivot	ASTM A105、ASTM A182-F11、F22、F5、F9、ASTM A182-F304、F316、F321、F304L、F316L
10	阀座 Seat	ASTM A105、ASTM A182-F11、F22、F5、F9、ASTM A182-F304、F316、F321、F304L、F316L

主要外形尺寸及重量 Main size of outside & weight

型号Model：H41H、H41Y、H44H、H44Y

Class		150				300				600			
DN (mm)	NPS (in)	尺寸 Dimensions(mm)			重量I(II、III) Weight (kg)	尺寸 Dimensions(mm)			重量I(II、III) Weight (kg)	尺寸 Dimensions(mm)			重量I(II、III) Weight (kg)
		L(RF)	L(RTJ)	H		L(RF)	L(RTJ)	H		L(RF)	L(RTJ)	H	
15	1/2	108	119	60	2.5(2.5)	152.5	163.5	60	2.5(2.7)	165	163.5	60	2.8(3.0)
20	3/4	117.5	130	60	3.3(3.4)	178	191	60	3.5(3.5)	191	190.5	60	4.2(4.1)
25	1	127	140	76	4.8(4.4)	203	216	76	5.0(4.8)	216	216	76	5.2(5.8)
32	1 1/4	140	153	85	7.0(8.2)	216	229	85	7.5(8.8)	229	229	85	7.7(9.5)
40	1 1/2	165	178	103	7.5(8.9)	228.5	241	103	7.9(9.8)	241	241	103	9.3(10.0)
50	2	203	216	118	11.0(12.5)	266.5	282	118	11.6(13.5)	292	295	118	13.2(15.5)

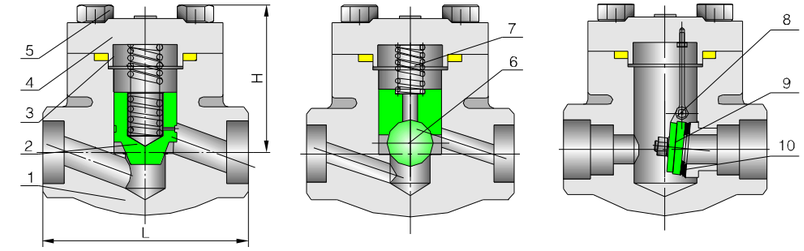

活塞式
Piston type

球形
Spherical

旋启式
Fasten the opening type

主要外形尺寸及重量 Main size of outside & weight

型号Model：H41H、H41Y、H44H、H44Y

Class	DN(mm)		NPS(in)		尺寸 Dimensions(mm)		重量 Weight (kg)
	缩径 Reduced bore	全径 Full bore	缩径 Reduced bore	全径 Full bore	L	H	
800 (旋启式) Piston type	15	10	1/2	3/8	80	61	1.0
	20	15	3/4	1/2	92	61	1.1
	25	20	1	3/4	111	78	1.8
	32	25	1 1/4	1	120	85	3.2
	40	32	1 1/2	1 1/4	120	103	4.5
	50	40	2	1 1/2	140	119	7.3
		50		2	170	132	9.8
800 (活塞式、球形) Piston type & spherical	15	10	1/2	3/8	80	61	1.2
	20	15	3/4	1/2	92	61	1.4
	25	20	1	3/4	111	78	2.5
	32	25	1 1/4	1	120	85	3.9
	40	32	1 1/2	1 1/4	152	103	5.5
	50	40	2	1 1/2	172	119	8.9
		50		2	200	132	12.5
1500 (旋启式) Fasten the opening type	15	10	1/2	3/8	111	79	3.3
	20	15	3/4	1/2	111	79	3.6
	25	20	1	3/4	120	96	4.3
	32	25	1 1/4	1	140	105	6.0
	40	32	1 1/2	1 1/4	140	120	8.7
	50	40	2	1 1/2	160	140	12.5
		50	3/8	2	220	160	16.0
1500 (活塞式、球形)	15	10	1/2	3/8	111	79	3.0
	20	15	3/4	1/2	111	79	3.5
	25	20	1	3/4	130	96	4.7
	32	25	1 1/4	1	150	105	7.0
	40	32	1 1/2	1 1/4	172	120	10.5
	50	40	2	1 1/2	220	140	14.5
		50		2	230	160	16.5

卓越品质 • 成就方圆

Excellent quality makes
Fangyuan a great achievement

截止阀系列

Globe valve series

美标截止阀

柱塞截止阀

节流截止放空阀

阀套式排污阀

低温截止阀

电动截止阀

波纹管截止阀

锻钢截止阀

法兰截止阀

FYV

法兰截止阀

电动截止阀

锻钢截止阀

低温截止阀

型号编制说明 Model schedule illustration

□ □ □ □ □ □ — □ □

- 阀体材料代号 Body material code
- 压力等级代号 Pressure grade code
- 密封面材质代号 Sealing formation code
- 结构形式代号 Design feature code
- 连接形式代号 Connecting type code
- 驱动方式代号 Driving manner code
- 阀门类型代号 Valve type code
- 结构特征代号 Feature code

● 结构特征代号：体、盖栓接结构(默认)　Hs—体、盖焊接结构　Ps—压力密封结构　FL—节流放空　T—阀套式(阀瓣)　K—抗硫
Feature code: Body, bonnet bolt-jointed structure (default)　Hs-body, bonnet welded structure　Ps-pressure sealed structure
FL—Reduce expenditure and put emptily　T—The valve is one set of types(valve one)　K—Antisulphur model

● 阀门类型代号：J—截止阀
Valve type code: J—Globe valve

● 驱动方式代号：4—正齿轮传动　5—伞齿轮传动　6—气动　6s—气动带手动　7—液动　9—电动　9B—防爆电动(手轮传动略)
Driving manner code: 4—Spur gear transmission　5—Bevel gear transmission　6—Air driving　6s—Take pneumatically manually
7—Hydrodynamic driving　9—Electric driving　9B—Explosion electric driving (Hand wheel driving omitted)

● 连接形式代号：1—内螺纹　2—外螺纹　4—法兰　6—焊接　8—承插焊
Connecting type code:1—Interior whorl　2—Other whorl　4—Flange　6—Welding　8—Bear and insert welding

● 结构形式代号：1—直通式　4—角式
Design feature code:1—Straight general formula　4—Angle type

● 密封面材质代号：Y—硬质合金　H—合金钢　D—渗氮钢　F—增强聚四氟乙烯　X—橡胶
Sealing formation code: Y—Hard alloy　H—Alloy steel　D—Nitriding steel　F—Intensified polytetrafluoroethylene(PTPE)　X—Rubber

● 压力等级代号：公称压力为MPa的10倍、磅级为实际数
Pressure grade code: The 10 times of the nominal pressure MPa, pound grade io practical number

● 阀体材料代号：(1)铸造阀体：C—WCB　I—WC6、ZG1Cr5Mo　V—WC9、ZG20CrMoV　P—CF8、ZG1Cr18Ni9Ti
R—CF8M、ZG1Cr18Ni12Mo2Ti　S—CF3　L—CF3M　F—LCB　N—LC3
(2)锻造阀体：C—A105　E—LF2　A—F11　V—F22　P—F304　R—F316　S—F304L　L—F316L
Body material code: (1)Cast the valve body: C—WCB　I—WC6、ZG1Cr5Mo　V—WC9、ZG20CrMoV　P—CF8、ZG1Cr18Ni9Ti
R—CF8M、ZG1Cr18Ni12Mo2Ti　S—CF3　L—CF3M　F—LCB　N—LC3
(2)Forge the valve body : C—A105　E—LF2　A—F11　V—F22　P—F304　R—F316　S—F304L　L—F316L

产品结构特点 Products design features

截止阀适用于公称压力PN1.6～16.0MPa(Class150～2500)，工作温度≤600℃的石油、化工、制药、化肥、电力行业等各种工况的管路上，切断或接通管路介质。

Globe valve are used to cut or connect the pipe media under nominal pressure between PN1.6～16.0MPa(Class150～2500), working temperatures ≤600℃. in oil industry, chemical industry,pharmaceuticals, fertilizer, and power industry.

其主要结构特点有：

The main structure features include:

1、产品结构合理、密封可靠、性能优良、造型美观。
Rational structure, reliable sealing, excellent performance, pretty appearance.

2、密封面堆焊Co基硬质合金，耐磨、耐蚀、抗擦伤性能好，使用寿命长。
Co-radix alloy welded sealing surface, anti-wearing, erosion-proof abrasion-proof and longer use life.

3、阀杆经调质及表面氮化处理，有良好的抗腐蚀性及抗擦伤性。
The surface and the adjusting media of the valve shaft are nitrogenized so that it is erosion and abrasion resistant.

4、公称压力≥25.0MPa(Class1500)中腔采用自紧密封式结构，密封性能随压力升高而增强，保证了密封性能。
PN≥25.0MPa (class1500), the middle cavity uses a self-tightening sealing structure to have the sealing performance reinforced along with the pressure rise so as to ensure the sealing performance.

5、阀门设有倒密封结构，密封可靠。
There is no backward sealing structure in the valve, so the sealing id reliable.

6、零件材质及法兰、对焊端尺寸可根据实际工况或用户要求合理选配，满足各种工程需要。
The material of the filling and the flange size can be chosen and matched according to the applications and the requirements of the use's. That can satisfies all kinds of working requirements.

产品主要参数 Main parameter of the products

基本型号 Serial models	(Hs、Ps)J11H、(Hs、Ps)J11Y、(Ps)J41H、(Ps)J41Y、(Ps)J541H、(Ps)J541Y、(Ps)J941H、(Ps)J941Y (Ps)J61H、(Ps)J61Y、(Ps)J561H、(Ps)J561Y、(Ps)J961H、(Ps)J961Y		
压力等级范围 Pressure grade range	PN1.6～42.0MPa (Class150～2500)		
通径范围 Drift diameter range	DN15～400mm(1/2"～16")		
驱动方式 Driving manner	手轮驱动 Hand wheel driving		齿轮动、电动 Gear driving and electric driving
适用范围 Scope of application	Class150～300 (PN1.6～2.5)	Class400～900 (PN6.4～16.0)	1/2"～16" (DN15～400mm)
	1/2"～12" (DN15～300mm)	1/2"～16" (DN15～400mm)	

产品性能规范 Products performance specification

压力等级 Pressure		常温试验压力(MPa) Testing pressure at constant temperature (Mpa)			适用温度 Applicable temperature	适用介质 Applicable medium
		壳体试验 The shell testing	密封试验 Seal and test	上密封试验 Have and seal testing		
公称压力 (MPa) Nominal rating pressure (PN)	1.6	2.4	1.76	1.76	-196～600℃	水、油品、蒸汽等 Water, oil, steam,etc.
	2.5	3.75	2.75	2.75		
	4.0	6.0	4.4	4.4		
	6.4	9.6	7.04	7.04		
	10.0	15.0	11.0	11.0		
	16.0	24.0	17.6	17.6		
	25.0	37.5	27.5	27.5		
磅级(Lb) Pound grade (Class)	150	3.0	2.2	2.2		
	300	7.5	5.5	5.5		
	600	15.0	11.0	11.0		
	900	22.5	16.5	16.5		
	1500	37.5	27.5	27.5		
	2500	63.0	46.2	46.2		

产品采用标准 Technical specification

结构形式 Structural formation	栓接阀盖明杆支架结构 Bolt-jointed bonnet outside stem yoke structure
驱动方式 Driving manner	手动、电动 Hand-operated, Electric-driving
设计标准 Design standard	GB/T 12235
结构长度 Face to face	GB/T 12221
连接法兰 Flanged ends	GB/T 9113、JB/T 79、HG20592
试验和检验 Test & inspection	JB/T 9092

注：阀门连接法兰及对焊端尺寸可根据用户要求设计制造。
Note: The sizes of valve connecting flange and butt-welding terminas can be designed according to customer's requirement.

主要零件材料 Major parts material form

序号 No.	零件名称 Part name	材 质 Material
1	阀体 Body	WCB、WC1、WC6、WC9、C5 CF8、CF8M、CF8C、CF3、CF3M
2	阀瓣 Disc	25、1Cr13、2Cr13、1Cr18Ni9Ti、 0Cr18Ni12Mo2Ti、20Cr1Mo1V、25Cr2MoV
3	阀杆 Stem	1Cr13、2Cr13、1Cr18Ni9 0Cr18Ni12Mo2Ti、20Cr1Mo1V、25Cr2Mov
4	阀瓣盖 Flat cover	25、1Cr13、2Cr13、1Cr18Ni9Ti、 0Cr18Ni12Mo2Ti、20Cr1Mo1V、25Cr2MoV
5	垫片 Gasket	柔性石墨+不锈钢 Graphite & stainless steel
6	阀盖 Bonnet	WCB、WC1、WC6、WC9、C5 CF8、CF8M、CF8C、CF3、CF3M
7	双头螺柱 Stud	35CrMoA、 0Cr18Ni9、0Cr17Ni12Mo2、25Cr2MoV
8	六角螺母 Nut	45、35CrMoA、 0Cr18Ni9、0Cr17Ni12Mo2、25Cr2MoV
9	填料 Packing	柔性石墨 Graphite
10	填料压盖 Packing gland	WCB CF8、CF8M、CF8C、CF3、CF3M
11	阀杆螺母 Valve stem nut	铜合金 Copper alloy
12	手轮 Handwheel	ASTM A47-32510

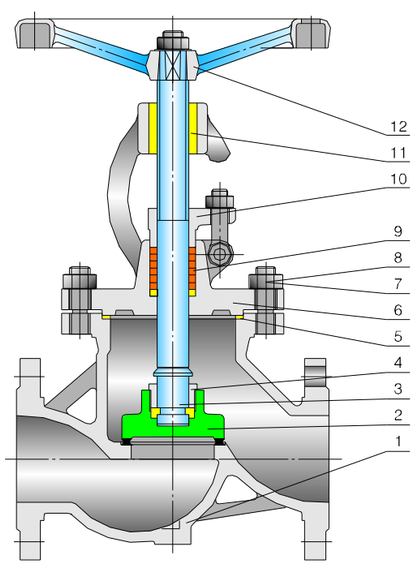

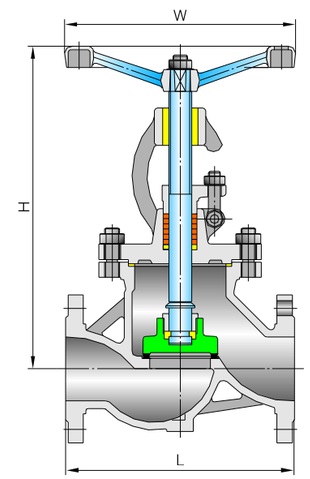

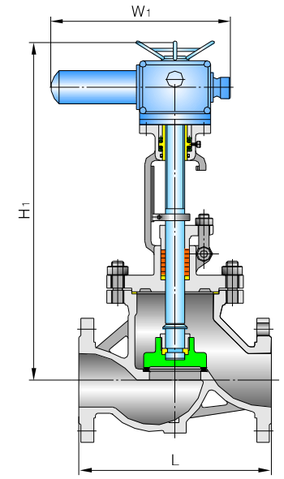

主要外形尺寸及重量 Main size of outside & weight

型号Model：J41H、J41Y、J41W、J41N、J941H、J941Y、J941W、J941N

传动方式 Driving			手动 Hand operated			电动 Electric driving			
PN (MPa)	DN (mm)	L	H	W	重量 Weight (kg)	H_1	W_1	电动装置 Electric driving	重量 Weight (kg)
1.6	15	130	218	120	5.3	–	–	–	–
	20	150	260	140	7.2	–	–	–	–
	25	160	275	160	7.5	–	–	–	–
	32	180	282	180	8.7	–	–	–	–
	40	200	332	200	12.4	–	–	–	–
	50	230	350	240	14	642	960	DZW10A	50
	65	290	405	280	22.5	695	960	DZW10A	62
	80	310	360	280	29.5	712	960	DZW10A	65
	100	350	412	320	34	772	960	DZW15A	73
	125	400	462	360	80	785	960	DZW20A	120
	150	480	510	400	95	812	960	DZW30A	212
	200	600	715	400	178	965	1325	DZW45A	325
	250	650	789	450	438	1138	1325	DZW60A	552
	300	750	925	500	650	1285	1370	DZW90	783
2.5	15	130	218	120	5.5	–	–	–	–
	20	150	260	140	7.4	–	–	–	–
	25	160	275	160	7.8	–	–	–	–
	32	180	282	180	8.7	–	–	–	–
	40	200	332	200	12.4	–	–	–	–
	50	230	350	240	15	642	960	DZW10A	52
	65	290	405	280	24.5	695	960	DZW10A	63
	80	310	360	280	31	712	960	DZW15A	68
	100	350	412	320	36	772	960	DZW20A	75
	125	400	462	360	88	785	960	DZW30A	122
	150	480	510	400	98	812	1325	DZW45A	215
	200	600	715	400	183	965	1325	DZW60A	327
	250	650	789	450	443	1138	1370	DZW90	555
	300	750	925	500	654	1285	1370	DZW120	786

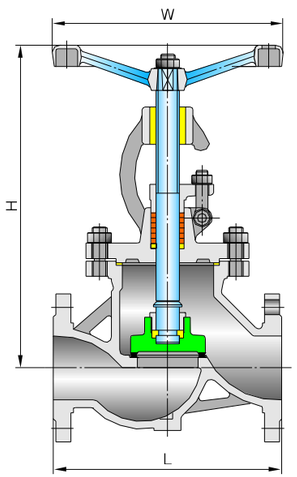

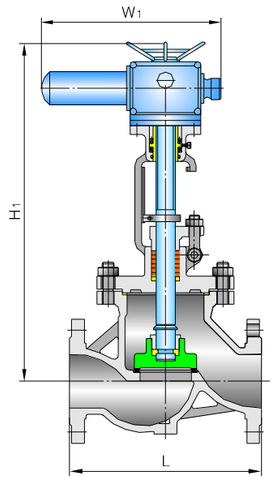

主要外形尺寸及重量 Main size of outside & weight

型号Model：J41H、J41Y、J41W、J41N、J941H、J941Y、J941W、J941N

传动方式 Driving			手动 Hand operated			电动 Electric driving			
PN (MPa)	DN (mm)	L	H	W	重量 Weight (kg)	H_1	W_1	电动装置 Electric driving	重量 Weight (kg)
4.0	15	130	235	120	5.9	–	–	–	–
	20	150	278	140	7.5	–	–	–	–
	25	160	288	160	8.0	–	–	–	–
	32	180	305	180	8.9	–	–	–	–
	40	200	358	200	12.5	–	–	–	–
	50	230	378	240	15.2	642	960	DZW10A	61
	65	290	408	280	24.6	695	960	DZW10A	78
	80	310	435	320	32	712	960	DZW20A	85
	100	350	482	360	40	772	960	DZW30A	105
	125	400	555	400	90	785	1325	DZW45A	205
	150	480	613	400	105	812	1325	DZW60A	228
	200	600	725	400	189	965	1370	DZW90	400
6.4	15	170	218	140	10.2	–	–	–	–
	20	190	260	160	13.5	–	–	–	–
	25	210	275	180	15	–	–	–	–
	32	230	325	200	20	–	–	–	–
	40	260	360	240	25	–	–	–	–
	50	300	410	280	36	710	960	DZW10A	65
	65	340	450	320	47	752	960	DZW15A	78
	80	380	485	360	55	785	960	DZW30A	85
	100	430	535	400	123	835	1325	DZW45A	173
	125	500	630	400	130	1030	1325	DZW60A	245
	150	556	650	450	155	1065	1370	DZW90	300
	200	650	810	500	285	1215	1370	DZW120	420

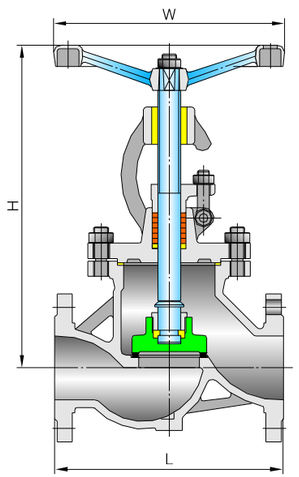

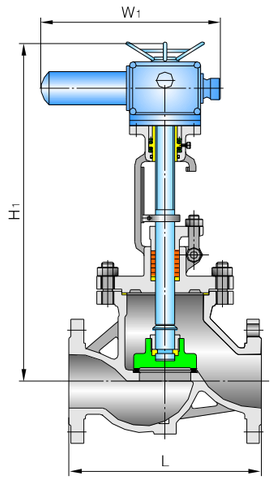

主要外形尺寸及重量 Main size of outside & weight

型号Model：J41H、J41Y、J41W、J41N、J941H、J941Y、J941W、J941N

传动方式 Driving			手动 Hand operated			电动 Electric driving			
PN (MPa)	DN (mm)	L	H	W	重量 Weight (kg)	H_1	W_1	电动装置 Electric driving	重量 Weight (kg)
10.0	15	170	220	120	10.5	–	–	–	–
	20	190	260	140	14	–	–	–	–
	25	210	275	160	15.5	–	–	–	–
	32	230	325	180	21	–	–	–	–
	40	260	360	200	26.5	–	–	–	–
	50	300	415	240	27	715	960	DZW20A	82
	65	340	455	280	49	760	960	DZW30A	105
	80	380	485	280	56	788	1325	DZW45A	178
	100	430	538	320	125	840	1325	DZW60A	195
	125	500	635	360	134	1032	1370	DZW90	288
	150	550	650	400	158	1072	1370	DZW120	450
	200	650	812	400	288	1220	1395	DZW180	855
16.0	15	170	220	140	12.5	–	–	–	–
	20	190	262	160	15.5	–	–	–	–
	25	210	275	180	18	–	–	–	–
	32	230	326	200	22	–	–	–	–
	40	260	362	240	35	–	–	–	–
	50	300	417	250	53	745	960	DZW30A	95
	65	340	455	320	72	825	1325	DZW45A	165
	80	380	485	400	101	940	1370	DZW90	220
	100	430	540	450	120	1152	1370	DZW120	240
	125	500	–	–	–	1185	1435	DZW180	500
	150	550	–	–	–	1230	1435	DZW250	678
	200	650	–	–	–	1500	1785	DZW350	1125

产品采用标准 Technical specification

结构形式 Structural formation	栓接阀盖明杆支架结构 Bolt-jointed bonnet outside stem yoke structure
驱动方式 Driving manner	手 动 Hand-operated
设计标准 Design standard	ASME B16.34、BS 1873
结构长度 Face to face	ASME B16.10
连接法兰 Flanged ends	ASME B16.5
试验和检验 Test & inspection	API 598

注：阀门连接法兰及对焊端尺寸可根据用户要求设计制造。
Notes: The sizes of valve connecting flange and butt-welding terminas can be designed according to customer's requirement.

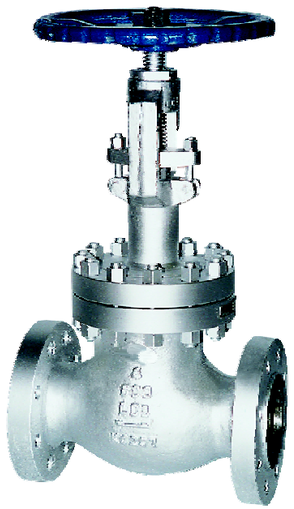

主要零件材料 Major parts material form

序号 No.	零件名称 Part name	材 质 Material
1	阀体 Body	ASTM A216-WCB ASTM A217-WC1、WC6、WC9、C5 ASTM A351-CF8、CF8M、CF8C、CF3、CF3M
2	阀瓣 Disc	ASTM A182 Gr.F6a、ASTM A182 F22 ASTM A182-F304、F316、F321、F304L、F316L
3	阀杆 Stem	ASTM A182 Gr.F6a、ASTM A182 F22 ASTM A182-F304、F316、F321、F304L、F316L
4	阀瓣盖 Flat cover	ASTM A182 Gr.F6a、ASTM A182 F22 ASTM A182-F304、F316、F321、F304L、F316L
5	垫片 Gasket	柔性石墨+不锈钢 Graphite & stainless steel
6	阀盖 Bonnet	ASTM A216-WCB ASTM A217-WC1、WC6、WC9、C5 ASTM A351-CF8、CF8M、CF8C、CF3、CF3M
7	双头螺柱 Stud	ASTM A193-B7、A320-B8、A193-B8M
8	六角螺母 Nut	ASTM A194-2H、A194-8、A194-8M
9	填料 Packing	柔性石墨 Graphite
10	填料压套 Packing press-sleeve	ASTM A182 Gr.F6a ASTM A182-F304、F316、F321、F304L、F316L
11	填料压盖 Packing gland	ASTM A216-WCB ASTM A351-CF8、CF8M、CF8C、CF3、CF3M
12	阀杆螺母 Valve stem nut	铜合金 Copper alloy
13	手轮 Handwheel	ASTM A47-32510

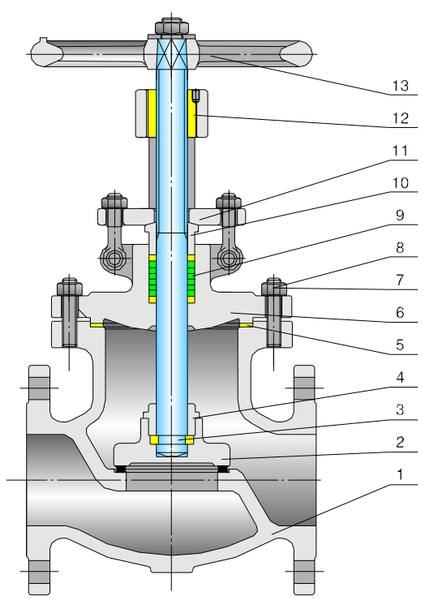

产品采用标准 Technical specification

结构形式 Structural formation	PS-BG-OS&Y
驱动方式 Driving manner	手动、齿轮动、电动 Hand-operated. Gear operated & Electric drining
设计标准 Design standard	ASME B16.34、BS 1873
结构长度 Face to face	ASME B16.10
连接法兰 Flanged ends	ASME B16.5
对焊端 Butt-welding ends	ASME B16.25
试验和检验 Test & inspection	API 598

注：阀门连接法兰及对焊端尺寸可根据用户要求设计制造。
Notes: The sizes of valve connecting flange and butt-welding terminas can be designed according to customer's requirement.

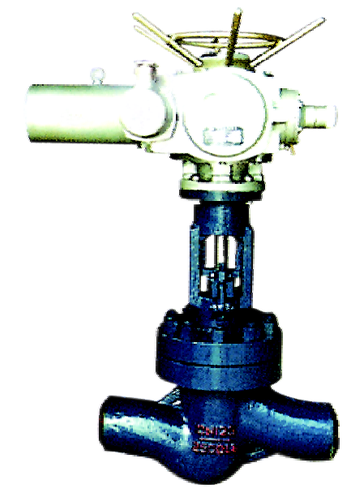

主要零件材料 Major parts material form

序号 No.	零件名称 Part name	材 质 Material
1	阀体 Body	ASTM A216-WCB ASTM A217-WC1、WC6、WC9、C5 ASTM A351-CF8、CF8M、CF8C、CF3、CF3M
2	阀瓣 Disc	ASTM A182 Gr.F6a、ASTM A182 F22 ASTM A182-F304、F316、F321、F304L、F316L
3	阀杆 Stem	ASTM A182 Gr.F6a、ASTM A182 F22 ASTM A182-F304、F316、F321、F304L、F316L
4	阀瓣盖 Flat cover	ASTM A182 Gr.F6a、ASTM A182 F22 ASTM A182-F304、F316、F321、F304L、F316L
5	阀盖 Bonnet	ASTM A182 Gr.F6a、ASTM A182 F22 ASTM A182-F304、F316、F321、F304L、F316L
6	垫片 Gasket	柔性石墨+不锈钢 Graphite & stainless steel
7	支架 Yoke	ASTM A216-WCB ASTM A217-WC1、WC6、WC9、C5 ASTM A351-CF8、CF8M、CF8C、CF3、CF3M
8	双头螺柱 Stud	ASTM A193-B7、A320-B8、A193-B8M
9	六角螺母 Six angle nuts	ASTM A194-2H、A194-8、A194-8M
10	填料 Packing	柔性石墨 Graphite
11	填料压盖 Packing gland	ASTM A216-WCB ASTM A351-CF8、CF8M、CF8C、CF3、CF3M
12	阀杆螺母 Valve stem nut	铜合金 Copper alloy
13	传动装置 Driving	

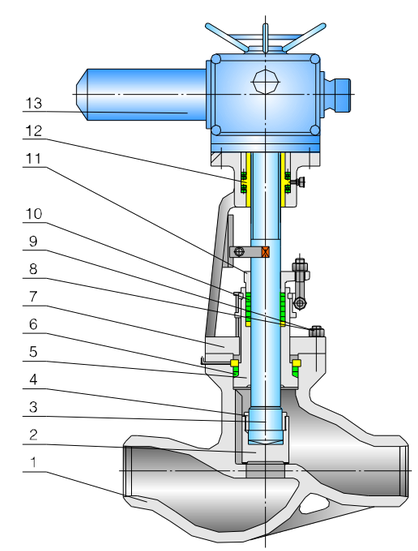

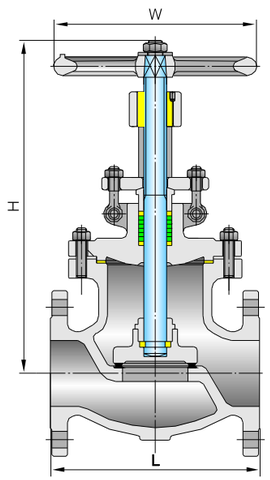

Class150～300

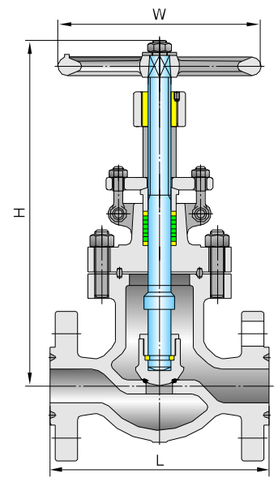

Class600～900

主要外形尺寸及重量 Main size of outside & weight

型号Model：J41H、J41Y

Class	DN (mm)	NPS (in)	尺寸 Dimensions(mm) L	H	W	重量 Weight (kg)	Class	DN (mm)	NPS (in)	尺寸 Dimensions(mm) L	H	W	重量 Weight (kg)
150	15	1/2	108	241	125	–	300	15	1/2	152	241	125	–
	20	3/4	117	241	125	–		20	3/4	178	241	125	–
	25	1	127	242	125	–		25	1	203	283	160	–
	32	1 1/4	140	280	160	–		32	1 1/4	216	320	200	–
	40	1 1/2	165	286	160	–		40	1 1/2	229	322	200	–
	50	2	203	368	200	18		50	2	267	399	200	25
	65	2 1/2	216	387	200	30		65	2 1/2	292	438	250	30
	80	3	241	400	250	36		80	3	318	450	280	52
	100	4	292	457	250	55		100	4	356	584	355	88
	150	6	406	609	355	104		150	6	444	660	450	160
	200	8	495	698	450	200		200	8	559	762	450	259
	250	10	622	762	450	300		250	10	622	850	500	420
	300	12	698	876	500	390		300	12	711	1085	500	595
	350	14	787	990	600	610		350	14	762	1187	600	876
	400	16	914	1104	600	880		400	16	864	1450	600	1010

Class	DN (mm)	NPS (in)	尺寸 Dimensions(mm) L	H	W	重量 Weight (kg)	Class	DN (mm)	NPS (in)	尺寸 Dimensions(mm) L	H	W	重量 Weight (kg)
600	50	2	295	430	180	35	900	50	2	372	569	320	65
	65	2 1/2	334	480	250	50		65	2 1/2	442	569	320	75
	80	3	359	508	250	90		80	3	384	635	350	120
	100	4	435	635	350	150		100	4	461	774	450	200
	150	6	562	914	450	300		150	6	613	1040	600	410
	200	8	664	1016	500	510		200	8	740	1330	720	790
	250	10	791	1219	600	850		250	10	842	1560	760	1300

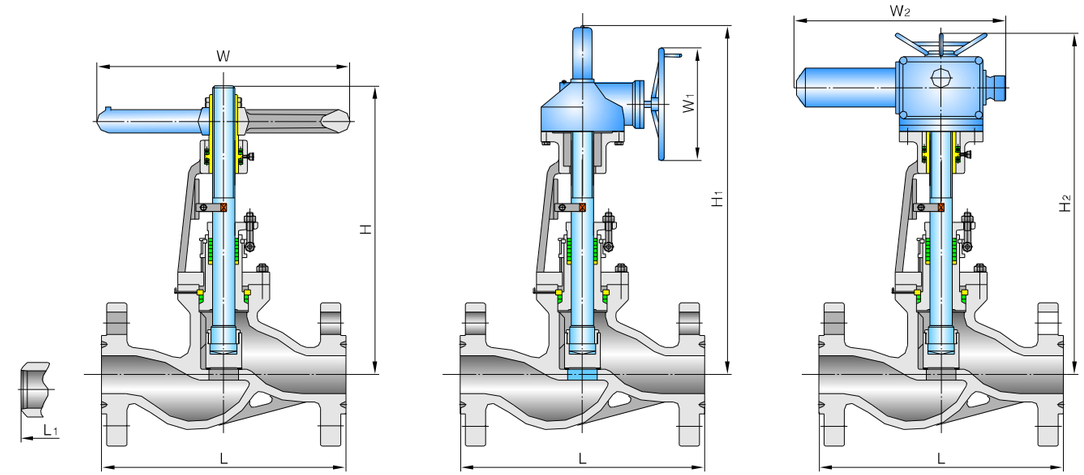

主要外形尺寸及重量 Main size of outside & weight

型号Model：法兰连接 Flanged：(Ps)J41H、(Ps)J41Y、(Ps)J541H、(Ps)J541Y、(Ps)J941H、(Ps)J941Y
对焊连接 Butt-welding：(Ps)J61H、(Ps)J61Y、(Ps)J561H、(Ps)J561Y、(Ps)J961H、(Ps)J961Y

传动方式 Driving					手动 Hand operated			齿轮动 Gear operated				电动 Electric driving			
Class	DN (mm)	NPS (in)	法兰 Flanged L	对焊 Butt-welded L1	H	W	重量 Weight (kg)	H1	W1	齿轮装置 Gear devlce	重量 Weight (kg)	H2	W2	转矩 Torque (NM)	重量 Weight (kg)
900	50	2	371	368	470	350	110	–	–	–	–	–	–	–	–
	65	2 1/2	422	419	560	400	130	–	–	–	–	–	–	–	–
	80	3	384	381	685	400	140	–	–	–	–	–	–	–	–
	100	4	460	457	830	500	230	880	460	BA-1	250	880	809	900	382
	150	6	613	610	–	–	–	1135	460	BA-1	500	1135	809	1200	635
	200	8	740	737	–	–	–	1495	610	BA-2	900	1495	863	1800	1155
	250	10	841	838	–	–	–	1960	610	BA-2	1200	1960	863	2000	1455
1500	50	2	371	368	535	400	130	–	–	–	–	–	–	–	–
	65	2 1/2	422	419	670	500	175	–	–	–	–	–	–	–	–
	80	3	473	470	838	500	245	–	–	–	–	–	–	–	–
	100	4	549	546	1193	560	350	990	460	BA-1	370	880	809	1200	505
	150	6	711	704	–	–	–	1280	610	BA-2	720	1135	863	1800	855
	200	8	841	831	–	–	–	1615	610	BA-2	1370	1495	863	2500	1628
	250	10	1000	990	–	–	–	2170	610	BA-2	1675	1960	863	2500	1933
2500	50	2	454	451	650	500	180	–	–	–	–	–	–	–	–
	65	2 1/2	514	508	840	560	250	–	–	–	–	–	–	–	–
	80	3	584	578	990	600	350	–	–	–	–	–	–	–	–
	100	4	683	673	1210	680	580	1090	610	BA-2	615	1090	863	1800	870
	150	6	927	814	–	–	–	1470	610	BA-2	990	1470	863	2500	1248
	200	8	1038	1022	–	–	–	1735	610	BA-2	1620	1735	960	3000	2050

注：对焊连接阀门尺寸可根据用户要求选配。

产品采用标准 Technical specification

结构形式 Structural formation	栓接阀盖明杆支架结构(压力密封) Bolt-jointed bonnet outside stem yoke structure(Pressure sealed)
驱动方式 Driving manner	手动 Hand-operated
设计标准 Design standard	ASME B16.34、BS 5352
结构长度 Face to face	ASME B16.10
连接法兰 Flanged ends	ASME B16.5
试验和检验 Test & inspection	API 598

注：阀门连接法兰及对焊端尺寸可根据用户要求设计制造。
Notes: The sizes of valve connecting flange and butt-welding terminas can be designed according to customer's requirement.

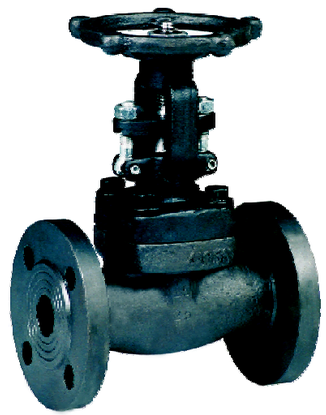

主要零件材料 Major parts material form

序号 No.	零件名称 Part name	材 质 Material
1	法兰 Flange	ASTM A105, ASTM A182-F11、F22、F5、F9 ASTM A182-F304、F316、F321、F304L、F316L
2	阀体 Body	ASTM A105, ASTM A182-F11、F22、F5、F9 ASTM A182-F304、F316、F321、F304L、F316L
3	阀瓣 Disc	ASTM A105, ASTM A182-F11、F22、F5、F9 ASTM A182-F304、F316、F321、F304L、F316L
4	阀杆 Stem	ASTM A182 Gr.F6a、ASTM A182 F22 ASTM A182-F304、F316、F321、F304L、F316L
5	垫片 Gasket	柔性石墨+不锈钢 Graphite & stainless steel
6	阀盖 Bonnet	ASTM A105, ASTM A182-F11、F22、F5、F9 ASTM A182-F304、F316、F321、F304L、F316L
7	螺栓 Bolt	ASTM A193-B7、A320-B8、A193-B8M
8	填料 Packing	柔性石墨 Graphite
9	填料压套 Stuffing cover	ASTM A105, ASTM A182-F11、F22、F5、F9 ASTM A182-F304、F316、F321、F304L、F316L
10	填料压盖 Gland	ASTM A216-WCB ASTM A351-CF8、CF8M、CF8C、CF3、CF3M
11	阀杆螺母 Valve stem nut	铜合金 Copper alloy
12	手轮 Handwheel	ASTM A47-32510

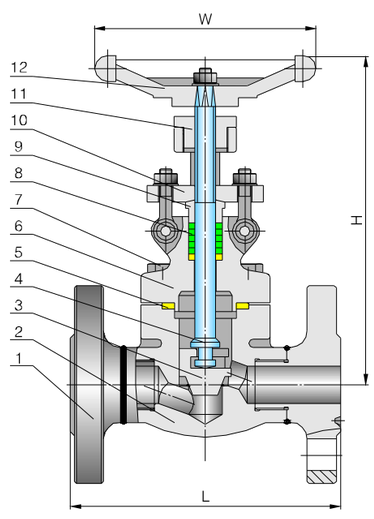

主要外形尺寸及重量 Main size of outside & weight

型号Model：(Hs、Ps)J11H、(Hs、Ps)J11Y、(Hs、Ps)J41H、(Hs、Ps)J41Y、(Hs、Ps)J61H、(Hs、Ps)J61Y

Class		150					300					600				
DN (mm)	NPS (in)	尺寸 Dimensions(mm)				重量 Weight (kg)	尺寸 Dimensions(mm)				重量 Weight (kg)	尺寸 Dimensions(mm)				重量 Weight (kg)
		L(RF)	L(RTJ)	H①	W		L(RF)	L(RTJ)	H①	W		L(RF)	L(RTJ)	H①	W	
15	1/2	108	119	170	100	3.5	152.5	163.5	170	100	4.2	165	163.5	170	100	5.5
20	3/4	117	130	170	100	4.8	178	191	170	100	5.3	190.5	190.5	170	100	7.0
25	1	127	140	205	125	6.5	203	216	205	125	7.5	216	216	205	125	9.7
32	1 1/4	140	153	225	160	9.8	216	229	225	160	11.3	229	229	225	160	12.5
40	1 1/2	165	178	254	160	12	228.5	241	254	160	16.5	241	241	254	160	18.4
50	2	203	216	292	180	15	266.5	282	292	180	18.2	292	295	292	180	20

注：①H为阀门全开时的高度。 Notes: H represents the height in full opening condition of valve.

产品采用标准 Technical specification

结构形式 Structural formation	栓接阀盖明杆支架结构(压力密封) Bolt-jointed bonnet outside stem yoke structure(Pressure sealed)
驱动方式 Driving manner	手动 Hand-operated
设计标准 Design standard	ASME B16.34、BS 5352
螺纹端 Thread ends	ASME B1.20.1
承插焊端 Socket welded ends	ASME B16.11
试验和检验 Test & inspection	API 598

注：阀门连接法兰及对焊端尺寸可根据用户要求设计制造。
Notes: The sizes of valve connecting flange and butt-welding terminas can be designed according to customer's requirement.

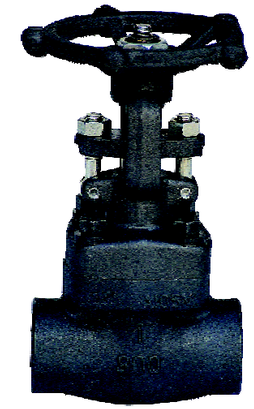

主要零件材料 Major parts material form

序号 No.	零件名称 Part name	材 质 Material
1	阀体 Body	ASTM A105, ASTM A182-F11、F22、F5、F9 ASTM A182-F304、F316、F321、F304L、F316L
2	阀瓣 Disc	ASTM A105, ASTM A182-F11、F22、F5、F9 ASTM A182-F304、F316、F321、F304L、F316L
3	阀杆 Stem	ASTM A182 Gr.F6a、ASTM A182 F22 ASTM A182-F304、F316、F321、F304L、F316L
4	垫片 Gasket	柔性石墨+不锈钢 Graphite & stainless steel
5	阀盖 Bonnet	ASTM A105, ASTM A182-F11、F22、F5、F9 ASTM A182-F304、F316、F321、F304L、F316L
6	螺栓 Bolt	ASTM A193-B7、A320-B8、A193-B8M
7	填料 Packing	柔性石墨 Graphite
8	填料压套 Stuffing cover	ASTM A105, ASTM A182-F11、F22、F5、F9 ASTM A182-F304、F316、F321、F304L、F316L
9	填料压盖 Gland	ASTM A216-WCB ASTM A351-CF8、CF8M、CF8C、CF3、CF3M
10	阀杆螺母 Valve stem nut	铜合金 Copper alloy
11	手轮 Handwheel	ASTM A47-32510

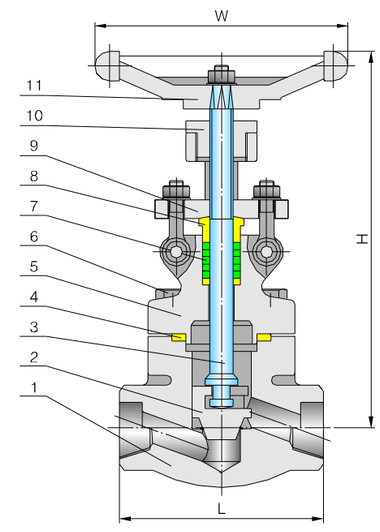

主要外形尺寸及重量 Main size of outside & weight

型号Model：(Hs、Ps)J11H、(Hs、Ps)J11Y、(Hs、Ps)J41H、(Hs、Ps)J41Y、(Hs、Ps)J61H、(Hs、Ps)J61Y

Class		900					1500				
DN		尺寸 Dimensions (mm)				重量 Weight (kg)	尺寸 Dimensions (mm)				重量 Weight (kg)
缩径Reduced bore		全径 Full bore		L	H①	W	L	H①	W		
mm	in	mm	in								
15	1/2	10	3/8	80	170	100	1.9	111	205	125	4.5
20	3/4	15	1/2	92	170	100	2.1	111	205	125	4.3
25	1	20	3/4	111	205	125	3.2	130	240	160	6.8
32	1 1/4	25	1	120	225	160	6.9	150	258	160	8.5
40	1 1/2	32	1 1/4	120	254	160	6.9	172	290	160	12.6
50	2	40	1 1/2	140	292	180	10.4	220	336	180	19.2
		50	2	178	330	240	15.8	230	428	234	30

注：①H为阀门全开时的高度。 Notes: H represents the height in full opening condition of valve.

产品采用标准 Technical specification

结构形式 Structural formation	栓接阀盖明杆支架结构(压力密封) Bolt-jointed bonnet outside stem yoke structure(Pressure sealed)
驱动方式 Driving manner	手动 Hand-operated
设计标准 Design standard	ASME B16.34、BS 5352
螺纹端 Thread ends	ASME B1.20.1
承插焊端 Socket welded ends	ASME B16.11
试验和检验 Test & inspection	API 598

注：阀门连接法兰及对焊端尺寸可根据用户要求设计制造。
Notes: The sizes of valve connecting flange and butt-welding terminas can be designed according to customer's requirement.

主要零件材料 Major parts material form

序号 No.	零件名称 Part name	材 质 Material
1	阀体 Body	ASTM A105, ASTM A182-F11、F22、F5、F9 ASTM A182-F304、F316、F321、F304L、F316L
2	阀瓣 Disc	ASTM A105, ASTM A182-F11、F22、F5、F9 ASTM A182-F304、F316、F321、F304L、F316L
3	阀杆 Stem	ASTM A182 Gr.F6a、ASTM A182 F22 ASTM A182-F304、F316、F321、F304L、F316L
4	阀盖 Bonnet	ASTM A105, ASTM A182-F11、F22、F5、F9 ASTM A182-F304、F316、F321、F304L、F316L
5	填料 Packing	柔性石墨 Graphite
6	填料压套 Packing press-sleeve	ASTM A105, ASTM A182-F11、F22、F5、F9 ASTM A182-F304、F316、F321、F304L、F316L
7	填料压盖 Packing gland	ASTM A216-WCB ASTM A351-CF8、CF8M、CF8C、CF3、CF3M
8	阀杆螺母 Valve stem nut	铜合金 Copper alloy
9	手轮 Handwheel	ASTM A47-32510

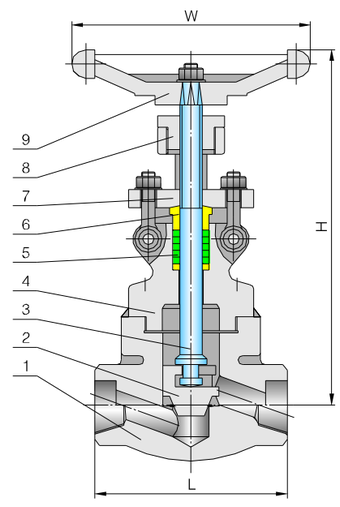

主要外形尺寸及重量 Main size of outside & weight

型号Model：(Hs、Ps)J11H、(Hs、Ps)J11Y、(Hs、Ps)J41H、(Hs、Ps)J41Y、(Hs、Ps)J61H、(Hs、Ps)J61Y

Class	DN(mm)		NPS(in)		尺寸 Dimensions(mm)			重量 Weight (kg)
	缩径 Reduced bore	全径 Full bore	缩径 Reduced bore	全径 Full bore	L	H[1]	W	
2500	15	10	1/2	3/8	111	190	125	4.5
	20	15	3/4	1/2	127	225	140	5.5
	25	20	1	3/4	127	246	160	8.0
	32	25	1 1/4	1	180	287	160	13.2
	40	32	1 1/2	1 1/4	180	290	180	12.8
	50	40	2	1 1/2	210	362	200	19.8
		50		2	230	420	240	30

注：①H为阀门全开时的高度。 Notes: H represents the height in full opening condition of valve.

产品结构特点 Products design features

1、本阀是一种新型的节流、截止、放空产品，该阀门采用笼形迷宫节流，具有多级节流效果，节流效果明显、密封可靠、操作维护方便等特点。

This valve is a brand-new throttle, stop and emptying product, uses a cage-like puzzle palace throttle and features a multiple-stage throttle effect, a notable throttle effect, a reliable seal and easy operation and maintenance.

2、阀门采用双重密封(硬、软质密封)使密封可靠、硬质合金密封面可以更耐气流冲刷、耐磨损，双重密封能做到在高压气体介质条件下的零泄漏。阀门使用寿命长。

The valve uses hard and soft two seals to get it reliably sealed, the carbide alloy sealing face becomes more resisting to the gas-flow erosion and more wearable and the dual-seal can realize null leak under the high pressure gas medium, leaving a long duration of the valve.

3、阀座的密封面采用锥度密封，有利于阀门自身清洗附在密封面上的脏物。

The sealing face of the seat ring uses a taper seal, benefit to the self-clean of the dirt absorbed onto the face.

4、阀门的阀瓣上设置了平衡孔，活塞式密封，保证了启/闭全压差条件下稳定操作，开启轻便灵活、启闭扭矩小。

A balancing hole and a piston type seal are set on the valve's disc, making sure of a stable operation, light and flexible open-close and a small open-close torque.

5、节流截止放空阀和双作用式节流阀同时具有节流与截止(密封为零泄漏)作用，节流部位与密封面分开，以减小气流对密封的冲刷。

The throttle, stop and emptying valve and the dual-action type throttle valve have both throttle and stop (null leak with the seal) actions, with the throttle portion separated from the sealing face so as to reduce the erosion of the gas flow to the seal.

6、双作用式节流截止阀还具有多级节流功能，节流压差大，能适用于高压下的节流与截止。

The dual-action type throttle valve also features a multiple-stage throttle function and a big throttle pressure differential and is suitable for throttle and stop under a high pressure.

7、填料采用带自密封能力的V形填料结构，无需调节，开、关极为轻便。填料函处设有辅助密封油脂注入结构，使阀门填料密封性能可靠。

The packing uses a V-type packing structure with self-seal ability, without need to adjust and with both open and close extremely light. An assisting sealing grease injector is set in the packing place to have its sealing performance reliable.

8、本阀门可以进行在线维修，管线可以带压状态下更换填料等一系列易损件。

The valve can be on-line repaired and replacement of the packing etc. series easily-worn-out parts can be done with a pressure with the pipeline.

9、本阀在阀门的底部设置了较大的排污孔，必要时可以打开，清理阀内污物。

A bigger sewage removing hole is set on the bottom of the valve, it can be opened when necessary to clean up the dirt inside of the valve.

流量特性 Flow characteristic

本阀作节流阀使用时，对流量调节作用明显。在小流量调节时流量特性曲线平缓(也可设计为大流量调节时流量特性曲线平缓)，对流量易于控制。

When used as a throttle valve, it presents a notable action of flow adjustment. The flow performance curve at a small flow adjustment is gentle (a gentle curve can also be designed for a big flow adjustment) so as to make the flow control easily.

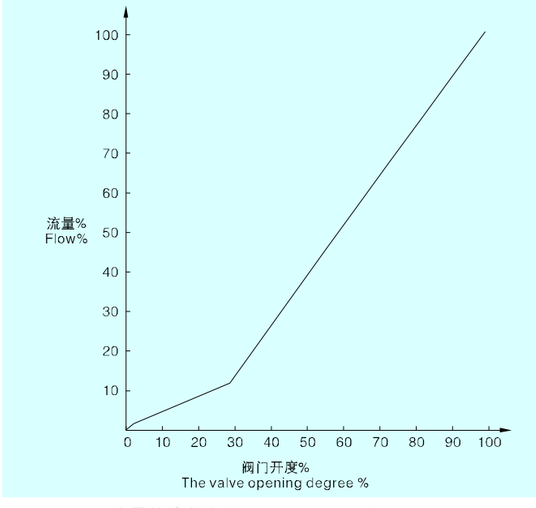

流量特性曲线 Flow characteristic curve

工作原理 Operation principle

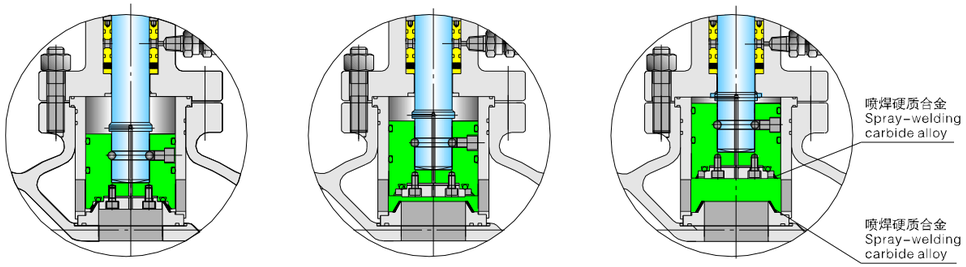

关闭状态
Close the state

节流状态
Throttle state

开启状态
Open the state

节流截止阀 Throttle stop valve

1、常闭状态：阀瓣硬密封付压在阀座凸台上，形成一道硬质密封，同时嵌在阀瓣上的软质密封与阀座端面紧压，形成第二道密封，双质密封结构保证了阀门的零泄漏，再由于阀瓣开设了平衡孔，使阀门在关闭、开启时，阀瓣受到较小的作用力，也使阀门开启、关闭时具有较小的力矩。

Constant close state: the hard seal pair of the disc presses on the convex desk of the seat ring to form the first hard seal and, in the meantime, the soft seal inlaid onto the disc is tightly against on the end-face of the seat ring to form the second seal, this dual-seal structure ensures null leak of the valve and, plus the balancing hole on the disc, the disc is subjected to a smaller effort during open and close of the valve and a smaller moment is made available for the valve to open and close.

2、缓压状态：阀瓣底端离开阀座密封面时，由于阀瓣底端面接近笼形套开槽处底边缘，此时阀瓣与笼形套内径形成一道密封。而没有直接放空泄压，从而达到缓和作用。

Moderated pressure state: when the disc bottom goes away from the sealing face of the seat ring, because the end face of the disc bottom is close to the edge of the slot bottom of the cage-like sleeve, both disc and internal bore of the cage-like sleeve form a seal, without directly emptying and pressure discharging, thus getting the moderating action.

3、节流状态：阀瓣密封付离开阀座，进一步开启，小阀瓣形成一级节流，高速流体经缓压节流后直接流向阀瓣底端与阀套开槽处形成窗口流道，达到二级节流，由于阀套窗口边缘是节流面，高压介质直接冲刷节流通道时，阀瓣底端由于介质流向改变产生涡流，缓减了介质对阀瓣的直接冲刷，从而阀座密封付也避开了介质的直接冲刷，同时由于阀瓣密封面是锥形的，可以吹扫阀座密封面上的污物及杂质，保护密封面，从而延长阀门的使用寿命。

Throttle state: when the disc seal pair goes away from the seat ring to further open, the small disc forms one stage throttle, the high speed fluid, through pressure moderated throttle, directly flows into the disc bottom and the slot of the seat ring to form a window geat, getting to the second throttle. Because the window edge of the valve sleeve is a throttle face, eddy is formed on the disc bottom due to the change of the medium flowing direction when the high pressure medium directly erodes the throttle channel, this reduces the direct erosion of the medium to the disc and the seat ring's seal pair also gets away from such erosion. Meanwhile, because of the conical sealing face of the disc, the dirt and foreign matters on the sealing face of the seat ring can be blown out to protect the sealing face, thus extending the valve duration.

4、全开状态：阀瓣处于全开启状态时，整个阀门处于全放空状态，流体在阀门中的阻力较小，缩短了放空时间，提高了阀门的放空效果。

Full-open state: when the disc is fully opened, the whole valve is in the fully-empty state, so the fluid has a small resistance inside of it to reduce the emptying time and raise the emptying effect of the valve.

工作原理 Operation principle

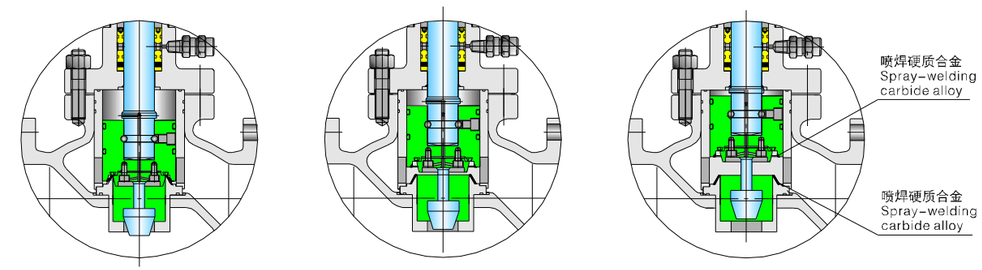

关闭状态
Close the state

节流状态
Throttle state

开启状态
Open the state

双作用节流截止阀 Dual-action throttle stop valve

1、常闭状态：阀瓣硬密封付压在阀座凸台上，形成一道硬质密封，同时嵌在阀瓣上的软质密封与阀座端面紧压，形成第二道密封，双质密封结构保证了阀门的零泄漏，再由于阀瓣开设了平衡孔，使阀门在关闭、开启时，阀瓣受到较小的作用力，也使阀门开启、关闭时具有较小的力矩。

Constant close state: the hard seal pair of the disc presses on the convex desk of the seat ring to form the first hard seal and, in the meantime, the soft seal inlaid onto the disc is tightly against on the end-face of the seat ring to form the second seal, this dual-seal structure ensures null leak of the valve and, plus the balancing hole on the disc, the disc is subjected to a smaller effort during open and close of the valve and a smaller moment is made available for the valve to open and close.

2、缓压状态：阀瓣底端离开阀座密封面时，由于阀瓣底端面接近笼形套开槽处底边缘，此时阀瓣与笼形套内径形成一道密封。而没有直接放空泄压，从而达到缓和作用。

Moderated pressure state: when the disc bottom goes away from the sealing face of the seat ring, because the end face of the disc bottom is close to the edge of the slot bottom of the cage-like sleeve, both disc and internal bore of the cage-like sleeve form a seal, without directly emptying and pressure discharging, thus getting the moderating action.

3、节流状态：阀瓣密封付离开阀座，进一步开启，小节流头处形成一级节流，高速流体经缓压节流后直接流向小阀瓣，由于阀套窗口边缘是最终节流面，高压介质直接冲刷节流通道时，阀瓣底端由于介质流向改变产生涡流，缓减了介质对阀瓣的直接冲刷，从而阀座密封付也避开了介质的直接冲刷，同时由于阀瓣密封面是锥形的，可以吹扫阀座密封面上的污物及杂质，保护密封面，从而延长阀门的使用寿命。

Throttle state: when the disc seal pair goes away from the seat ring to further open, the small throttle head forms one stage throttle, the high speed fluid, through pressure moderated throttle, directly flows into the small disc. Because the window edge of the valve sleeve is the final throttle face, eddy is formed on the disc bottom due to the change of the medium flowing direction when the high pressure medium directly erodes the throttle channel, this reduces the direct erosion of the medium to the disc and the seat ring's seal pair also gets away from such erosion. Meanwhile, because of the conical sealing face of the disc, the dirt and foreign matters on the sealing face of the seat ring can be blown out to protect the sealing face, thus extending the valve duration.

4、全开状态：阀瓣处于全开启状态时，整个阀门处于全放空状态，流体在阀门中的阻力较小，缩短了放空时间，提高了阀门的放空效果。

Full-open state: when the disc is fully opened, the whole valve is in the fully-empty state, so the fluid has a small resistance inside of it to reduce the emptying time and raise the emptying effect of the valve.

产品性能规范 Products performance specification

压力等级 Pressure		常温试验压力(MPa)				适用温度(℃) Applicable temperature			适用介质 Applicable medium	
		壳体 Shell	密 封 Seal	上密封 Have and seal	气体低压密封	G型 G type	D型 D type	普 通 Ordinary	抗硫型 Sulphur resisting type	普 通 Ordinary
公称压力 (MPa) Nominal rating pressure (PN)	1.6	2.4	1.76	1.76	0.6	-29～250	-45～121	-29～121	含H_2S和 CO_2>500mg/m³ 的介质	石油、天然气、水等 Petroleum, natural gas, water ,etc.
	2.5	3.8	2.75	2.75	0.6					
	4.0	6.0	4.4	4.4	0.6					
	6.4	9.6	7.04	7.04	0.6					
	10.0	15.0	11.0	11.0	0.6					
	16.0	24.0	17.6	17.6	0.6					

产品采用标准 Technical specification

设计标准 Design standard		GB/T12235
结构长度 Face to face	法兰连接 Flanged ends	GB/T12221
	对焊连接 Welded connection	GB/T15188.1
连接法兰 Flanged ends		JB/T79、GB/T9113
对焊端 Butt-welding ends		GB/T12224
试验和检验 Test & inspection		JB/T9092

注：阀门连接法兰及对焊端尺寸可根据用户要求设计制造。
Notes: The sizes of valve connecting flange and butt-welding terminas can be designed according to customer's requirement.

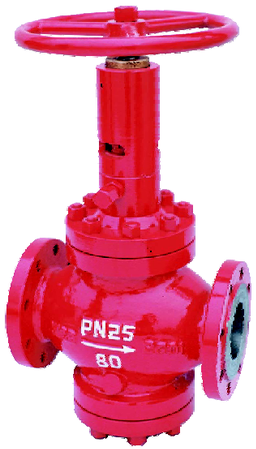

主要零件材料 Major parts material form

序号 No.	零件名称 Part name	材 质 Material	序号 No.	零件名称 Part name	材 质 Material
1	双头螺柱 Stud	35CrMo	14	阀杆 Stem	2Cr13
2	螺母 Nut	35	15	阀盖 Bonnet	25
3	底盖 Bottom covering	20	16	下填料垫 Put the packing cushion	1Cr13
4	O形圈 O-Rong	NBR	17	中填料 Middle packing	PTFE
5	阀体 Body	WCB	18	中填料 Middle packing	NBR
6	阀座 Seat	20+Ni45	19	上填料垫 Have the packing cushion	1Cr13
7	内六角圆柱头螺钉 Socket head cap round-stud screw	35	20	隔环 Spacing ring	PTFE
8	压板 Pressing plate	20	21	填料压盖 Packing gland	45
9	密封圈 Seal ring	NBR	22	支架 Yoke	WCB
10	芯套 Core set	20+ENP	23	阀杆螺母 Valve stem nut	ZQAL9-4
11	阀瓣 Disc	2Cr13+Ni60	24	手轮 Handwheel	20
12	钢球 Steel ball	Gcr15	25	螺母 Nut	35
13	O形圈 O-Ring	NBR	26	注脂阀 Fat valve of the note	25+镀锌(组件) 25+zinc-plated (package)

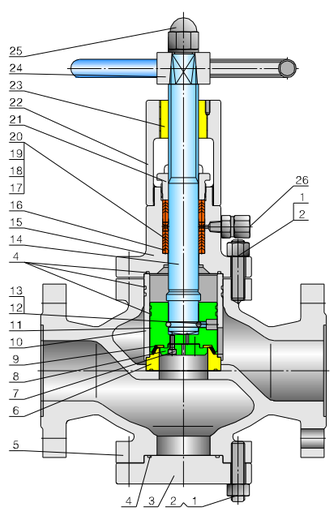

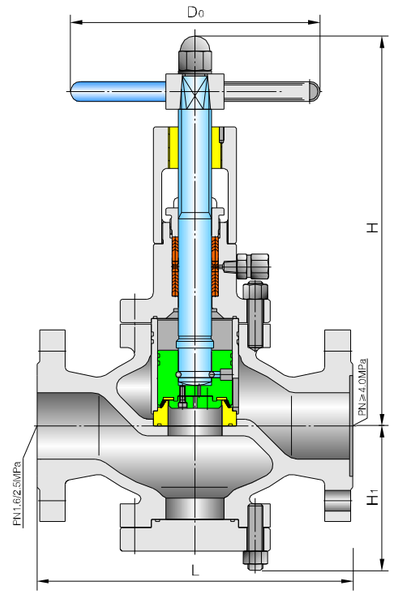

主要外形尺寸及重量 Main size of outside & weight

型号Model：(K)FLJ41Y、(K)FLJ41Y

PN (MPa)	DN (mm)	尺寸 Dimensions (mm) L	H	H_1	D_0	重量(kg) Weight
1.6	25	216	243	86	180	17
	40	230	265	108	250	24
	50	230	346	115	250	27
	80	310	409	146	300	52
	100	350	433	163	300	60
	150	480	521	202	350	125
	200	600	594	292	350	165
	250	730	621	355	400	285
2.5	25	216	243	86	180	17
	40	230	265	108	250	24
	50	230	346	115	250	27
	80	310	409	146	300	55
	100	350	433	163	300	66
	150	480	521	202	350	140
	200	600	594	292	350	180
	250	730	621	355	400	310
4.0	25	216	243	86	180	20
	40	230	265	108	250	29
	50	230	346	115	250	32
	80	310	409	146	300	67
	100	350	433	163	300	80
	150	480	521	202	350	168
	200	600	594	292	350	215
	250	730	621	355	400	372

PN (MPa)	DN (mm)	尺寸 Dimensions (mm) L	H	H_1	D_0	重量(kg) Weight
6.4	25	216	243	86	180	20
	40	230	265	108	250	29
	50	230	346	115	250	32
	80	310	409	146	300	67
	100	350	433	163	300	80
	150	480	521	202	350	168
	200	600	594	292	350	215
	250	730	621	355	400	372
10.0	25	230	245	78	200	29
	40	260	265	106	250	42
	50	300	287	110	300	55
	80	380	409	152	350	95
	100	430	433	169	350	120
	150	559	531	225	400	240
	200	660	709	321	500	310
	250	787	817	399	500	530
16.0	25	230	215	78	200	35
	40	260	265	105	250	50
	50	300	237	110	300	65
	80	390	414	155	350	116
	100	450	440	175	350	145

产品结构特点 Products design features

1、本阀是一种新型的节流、截止、放空产品，该阀门采用笼形迷宫节流，具有多级节流效果，节流效果明显、密封可靠、操作维护方便等特点。

This valve is a brand-new throttle, stop and emptying product, uses a cage-like puzzle palace throttle and features a multiple-stage throttle effect, a notable throttle effect, a reliable seal and easy operation and maintenance.

2、阀门采用双重密封(硬、软质密封)使密封可靠、硬质合金密封面可以更耐气流冲刷、耐磨损，双重密封能做到在高压气体介质条件下的零泄漏。阀门使用寿命长。

The valve uses hard and soft two seals to get it reliably sealed, the carbide alloy sealing face becomes more resisting to the gas-flow erosion and more wearable and the dual-seal can realize null leak under the high pressure gas medium, leaving a long duration of the valve.

3、阀座的密封面采用锥度密封，有利于阀门自身清洗附在密封面上的脏物。

The sealing face of the seat ring uses a taper seal, benefit to the self-clean of the dirt absorbed onto the face.

4、阀门的阀瓣上设置了平衡孔，活塞式密封，保证了启/闭全压差条件下稳定操作，开启轻便灵活、启闭扭矩小。

A balancing hole and a piston type seal are set on the valve's disc, making sure of a stable operation, light and flexible open-close and a small open-close torque.

5、填料采用带自密封能力的V形填料结构，无需调节，开、关极为轻便。填料函处设有辅助密封油脂注入结构，使阀门填料密封性能可靠。

The packing uses a V-type packing structure with self-seal ability, without need to adjust and with both open and close extremely light. An assisting sealing grease injector is set in the packing place to have its sealing performance reliable.

6、本阀门可以进行在线维修，管线可以带压状态下更换填料等一系列易损件。

The valve can be on-line repaired and replacement of the packing etc. series easily-worn-out parts can be done with a pressure with the pipeline.

7、本阀在阀门的底部设置了较大的排污孔，必要时可以打开，清理阀内污物。

A bigger sewage removing hole is set on the bottom of the valve, it can be opened when necessary to clean up the dirt inside of the valve.

8、排污阀阀瓣的外园处设有O形密封圈，在启/闭时具有自清扫功能和密封，排污时具有节流降压功能。

There is O-seal ring on the outer circle of the sewage valve's disc, it features self-clean and self-seal function at open-close and throttle and pressure reduction function at sewage removal.

工作原理 Operation principle

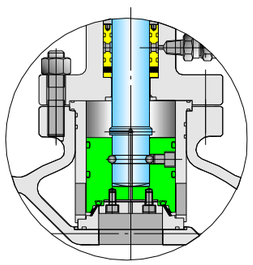

关闭状态
Close the state

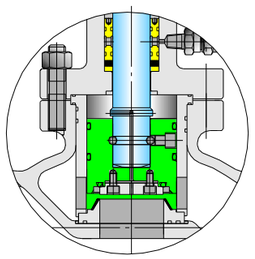

节流/排污状态
Throttle/sewage removal state

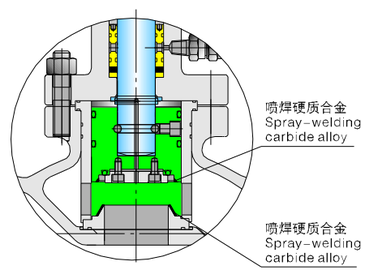

开启状态
Open the state

1、常闭状态：阀瓣硬密封付压在浮动阀座凸台上，形成一道硬质密封，同时嵌在阀瓣上的软质密封与阀座端面紧压，形成第二道密封，双质密封结构保证了阀门的零泄漏，再由于阀瓣开设了平衡孔，使阀门在关闭、开启时，阀瓣受到较小的作用力，也使阀门开启、关闭时具有较小的力矩。

Constant close state: the hard seal pair of the floating disc presses on the convex desk of the seat ring to form the first hard seal and, in the meantime, the soft seal inlaid onto the disc is tightly against on the end-face of the seat ring to form the second seal, this dual-seal structure ensures null leak of the valve and, plus the balancing hole on the disc, the disc is subjected to a smaller effort during open and close of the valve and a smaller moment is made available for the valve to open and close.

2、节流排污状态：阀瓣密封付离开阀座，由于在阀瓣处设有了平衡孔，使阀门开启极为轻便。阀门开启后，管道中的介质、杂质一同流过阀套、阀座，同时实现节流与排污。阀瓣、阀座密封面利用套垫斜角改变介质流向，具有自清扫功能，使密封付不夹带杂质。

Throttle and sewage removal state: when the disc seal pair goes away from the seat ring, the balancing hole set on the disc makes the valve extremely easily opened and closed. After the valve is opened, the medium and the foreign matters go through the valve sleeve and the seat ring together and both throttle and sewage removal are realized. The sealing faces of both disc and seat ring use the inclination of the sleeve pad to change the medium's flowing direction and feature self-clean function so as to have the seal pair without foreign matters.

3、关闭状态：管道中介质排放后关闭阀门，介质从套垫斜角处进入阀座通道，流阻系数增加，流速加快，斜角改变介质流向方向，产生涡流，阀座端面介质径向力增加，实现阀座密封的吹扫。阀瓣密封付接近阀座时，套垫与阀座通道的配合间隙阻止较大颗粒介质流向密封付，加之流速的进一步增大和介质横向力的吹扫，阀门关闭时密封付杂质已完全清扫干净，保证了阀门排污后的密封性能，从而进一步保证排污后密封性也能达到无泄漏。因此大大提高了能力并延长了使用寿命。

Closed state: when the valve is closed after the medium in the pipeline is drained out, the medium goes into the seat ring's channel through the inclination of the sleeve pad, the fluid resistance coefficient increases, the flow rate becomes quicker, the inclination changes the medium's flowing direction to produce eddy. The radial force of the medium on the end-face of the seat ring increases to carry out the blowing on the seal of the seat ring. When the disc seal pair is close to the seat ring, the fit interval between the sleeve pad and the seat ring's channel resists the bigger grain medium to flow into the seal pair, plus the further increased flow rate and the lateral blowing by the medium, the foreign matters with the seal pair has been completely cleaned when the valve is closed so as to ensure the sealing performance of the valve after sewage removal, further ensure null leak from the seal after sewage removal, thus greatly enhancing the capacity and extending the duration.

产品性能规范 Products performance specification

压力等级 Pressure		常温试验压力(MPa) Testing pressure at constant temperature (Mpa)				适用温度(℃) Applicable temperature			适用介质 Applicable medium	
		壳体 Shell	密 封 Seal	上密封 Have and seal	气体低压密封 Low pressure air tightness	G型 G type	D型 D type	普 通 Ordinary	抗硫型 Sulphur resisting type	普 通 Ordinary
公称压力 (MPa) Nominal rating pressure (PN)	1.6	2.4	1.76	1.76	0.6	-29～250	-45～121	-29～121	含H_2S和 CO_2>500mg/m³ 的介质 Medium containing H_2S and CO_2 > 500mg/m³	石油、天然气、水等 Petroleum, natural gas, water ,etc.
	2.5	3.8	2.75	2.75	0.6					
	4.0	6.0	4.4	4.4	0.6					
	6.4	9.6	7.04	7.04	0.6					
	10.0	15.0	11.0	11.0	0.6					
	16.0	24.0	17.6	17.6	0.6					

产品采用标准 Technical specification

设计标准 Design standard		GB/T12235
结构长度 Face to face	法兰连接 Flanged ends	GB/T12221
	对焊连接 Welded connection	GB/T15188.1
连接法兰 Flanged ends		JB/T79、GB/T9113
对焊端 Butt-welding ends		GB/T12224
试验和检验 Test & inspection		JB/T9092

注：阀门连接法兰及对焊端尺寸可根据用户要求设计制造。
Notes: The sizes of valve connecting flange and butt-welding terminas can be designed according to customer's requirement.

主要零件材料 Major parts material form

序号 No.	零件名称 Part name	材 质 Material
1	双头螺柱 Stud	35CrMo
2	螺母 Nut	35
3	底盖 Bottom covering	20
4	O形圈 O-Ring	NBR
5	阀体 Body	WCB
6	排污套 Blowdown set	1Cr18Ni9
7	滤网 Filter screen	1Cr18Ni9
8	阀座 Seat	20+Ni45
9	内六角圆柱头螺钉 Socket head cap round-stud screw	35
10	压板 Pressing plate	20
11	密封圈 Seal ring	NBR
12	芯套 Core set	20+ENP
13	阀瓣 Disc	2Cr13+Ni60
14	钢球 Steel ball	Gcr15
15	阀杆 Stem	2Cr13
16	阀盖 Bonnet	25
17	下填料垫 Put the packing cushion	1Cr13
18	中填料 Middle packing	PTFE
19	中填料 Middle packing	NBR
20	上填料垫 Have the packing cushion	1Cr13
21	隔环 Spacing ring	PTFE
22	填料压盖 Packing gland	45
23	支架 Yoke	WCB
24	阀杆螺母 Valve stem nut	ZQAL9-4
25	手轮 Handwheel	20
26	螺母 Nut	35
27	注脂阀 Fat valve of the note	25+镀锌(组件) 25+zinc-plated(package)

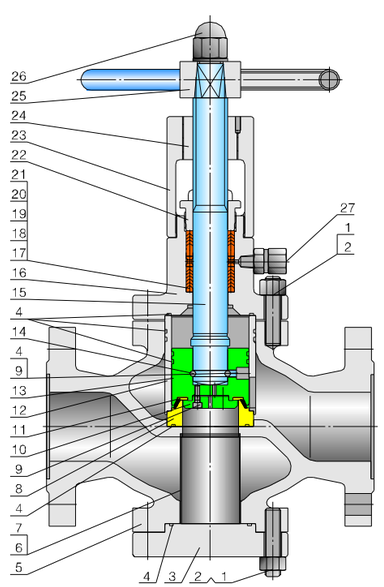

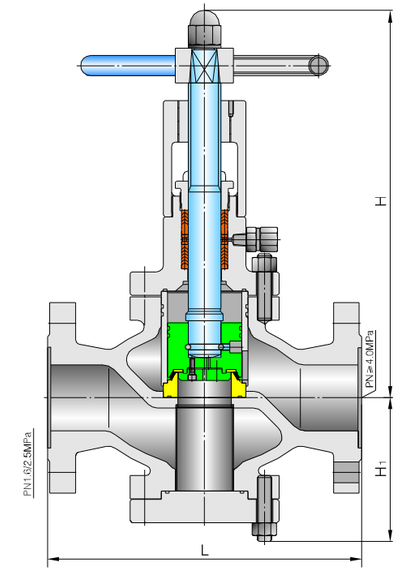

主要外形尺寸及重量 Main size of outside & weight

型号Model：(K)TP41Y

PN (MPa)	DN (mm)	尺寸 Dimensions (mm)				重量(kg) Weight
		L	H	H_1	D_0	
1.6	25	216	243	86	180	18
	40	230	265	108	250	25
	50	230	346	115	250	28
	80	310	409	146	300	53
	100	350	433	163	300	62
	150	480	521	202	350	128
	200	600	594	292	350	168
	250	730	621	355	400	289
2.5	25	216	243	86	180	18
	40	230	265	108	250	25
	50	230	346	115	250	28
	80	310	409	146	300	57
	100	350	433	163	300	69
	150	480	521	202	350	145
	200	600	594	292	350	188
	250	730	621	355	400	315
4.0	25	216	243	86	180	21
	40	230	265	108	250	31
	50	230	346	115	250	35
	80	310	409	146	300	70
	100	350	433	163	300	85
	150	480	521	202	350	172
	200	600	594	292	350	219
	250	730	621	355	400	378

PN (MPa)	DN (mm)	尺寸 Dimensions (mm)				重量(kg) Weight
		L	H	H_1	D_0	
6.4	25	216	243	86	180	21
	40	230	265	108	250	37
	50	230	346	115	250	42
	80	310	409	146	300	84
	100	350	433	163	300	100
	150	480	521	202	350	208
	200	600	594	292	350	265
	250	730	621	355	400	452
10.0	25	230	245	78	200	30
	40	260	265	106	250	44
	50	300	287	110	300	58
	80	380	409	152	350	98
	100	430	433	169	350	125
	150	559	531	225	400	245
	200	660	709	321	500	316
	250	787	817	399	500	540
16.0	25	230	215	78	200	36
	40	260	265	105	250	54
	50	300	237	110	300	69
	80	390	414	155	350	120
	100	450	440	175	350	150

卓越品质 • 成就方圆

Excellent quality makes
Fangyuan a great achievement

蝶阀系列

Butterfly valve series

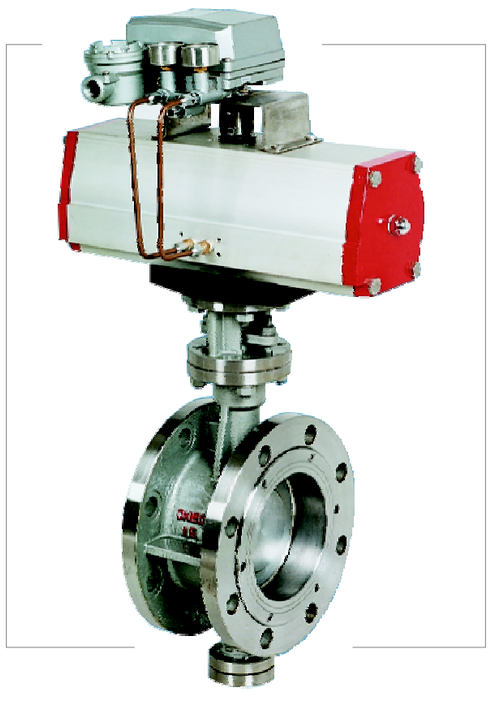

法兰蝶阀

焊接式蝶阀

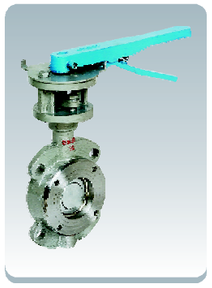

对夹式蝶阀

电动对夹式蝶阀

对夹式蝶阀

FYV

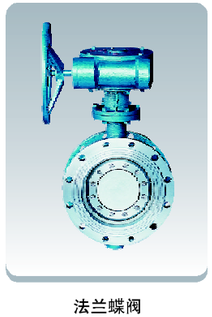

法兰蝶阀

气动法兰蝶阀

对夹式蝶阀

型号编制说明 Model schedule illustration

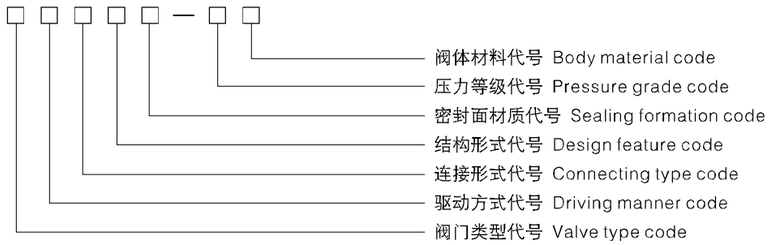

- 阀门类型代号：D—蝶阀
  Valve type code: D—Butterfly valve
- 驱动方式代号：3—蜗轮蜗杆传动　6—气动　9—电动(手柄传动略)
  Driving manner code: 3—Worm wheel and screw transmission　6—Air driving　9—Electric driving(Hand wheel driving omitted)
- 连接形式代号：4—法兰连接　6—焊接　7—对夹连接
  Connecting type code: 1—Flange connecting　6—Welded connection　7—Wafer type connecting
- 结构形式代号：2—单偏心结构　3—双偏心结构　4—变偏心结构　5—三偏心结构
  Design feature code:2—Single eccentric structure　3—Double eccentric structure　4—Veriable eccentric structure
  5—Three eccentric structure
- 密封面材质代号：X—橡胶　F—增强聚四氟乙烯　H—合金钢　W—本体不锈钢　Y—硬质合金
  Sealing formation code: X—Rubber　F—polytetrafluoroethylene　H—Alloy steel　W—Stainless steel body　Y—Hard alloy
- 压力等级代号：公称压力为MPa的10倍、磅级为实际数
  Pressure grade code: The 10 times of the nominal pressure MPa, pound grade io practical number
- 阀体材料代号：Z—HT200　C—WCB　P—CF8、ZG1Cr18Ni9Ti　R—CF8M、ZG1Cr18Ni12Mo2Ti
  Body material code: Z—HT200　C—WCB　P—CF8、ZG1Cr18Ni9Ti　R—CF8M、ZG1Cr18Ni12Mo2Ti

例：D343Y-16P

注释：蝶阀公称压力为1.6MPa、蜗轮传动、法兰连接、双偏心结构、阀体材质为CF8，密封面材质为硬质合金。

Denotes 1.6Mpa nominal rating pressure, worm wheel and screw transmission, flange-connecting, double eccentric structure, CF8 valve material, and hard alloy sealing material.

产品结构特点 Products design features

系列蝶阀适用于食品、饮料、医药、化工、工业环保水处理、高层建筑、给排水、燃气等管路作启闭或调节介质流量之用。主要结构特点有：

The series of the butterfly valves can be applied to food,drink,medicine,chemical industry,industrial environmental protection water treatment,high building,water supply, drainage and gas, etc.used to start or stop or adjust medium flow quantity,The major features of the structure.

1、结构简单、体积小、重量轻、安装尺寸小。
Simple structure,small volume,light weight,small installation dimension.

2、密封材料有软、硬两种，可用于各种不同的工况，且密封性能好，使用寿命长。
Having two kinds of seal material: soft and hard,can be used in various working conditions,with good sealing performance, and long life-span.

3、防火结构设计的蝶阀可防止火灾事故的扩大，一旦蝶阀的软密封阀座着火烧损后，不锈钢金属密封圈便发挥作用使蝶阀保持紧急密封。
Anti-fire structure designed butterfly valve can prevent the expanding of an accidental fire,once the soft sealing valve seat of the butterfly valve catches fire and damaged,the stainless steel seal ring will give play to make butterfly valve keep emergency sealed.

4、蝶阀在完全开启的情况下，流阻较小，部分开启的情况下能进行灵敏的流量控制。
In the condition of the butterfly valve fully opened,it has little flow resistance,and in the condition of the butterfly valve partially opened,the flow quantity can be controlled sensitively.

5、驱动力矩小、操作简便、迅速。
Little driving couple,convenient and quick operations.

密封原理分析 Sealing principle analysis

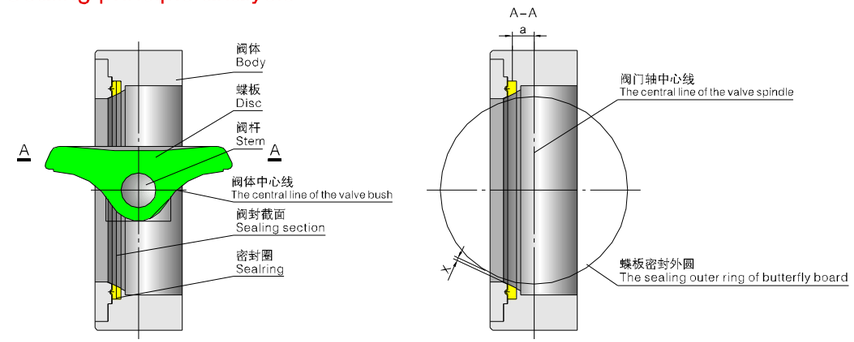

单偏心密封蝶阀密封副结构
The sealing structure of the single eccentric seal butterfly valve

1、单偏心密封蝶阀的密封原理

由于蝶板的回转中心(即阀门轴中心)与蝶板密封截面按a偏心设置，使得蝶阀在开启过程中，蝶板密封面逐渐脱离阀座密封面，蝶板转动至20°～25°时，蝶板密封面完全脱离阀座密封面，完全开启时，两密封面之间形成间隙X，从而使得蝶阀在启闭过程中，两密封面之间相对机械磨损及挤压大为降低，从而保证了蝶阀的密封。

1. The sealing principle of the single eccentric butterfly valve

As the center of gyration of the disc (the center of valve spindle) and the sealing section of the disc are set up in eccentric(a), it makes the sealing section of the disc gradually separate from the sealing section of the valve seat in the course of opening the butterfly valve,when the disc revolves to 20°～25°, the sealing section of disc will completely brake away from the sealing section of the valve seat, and when completely opened, a gap X will be formed in two sealing sections, thus making the relative mechanical wear and extrusion decrease between two sealing section, and ensure the seal of the butterfly valve.

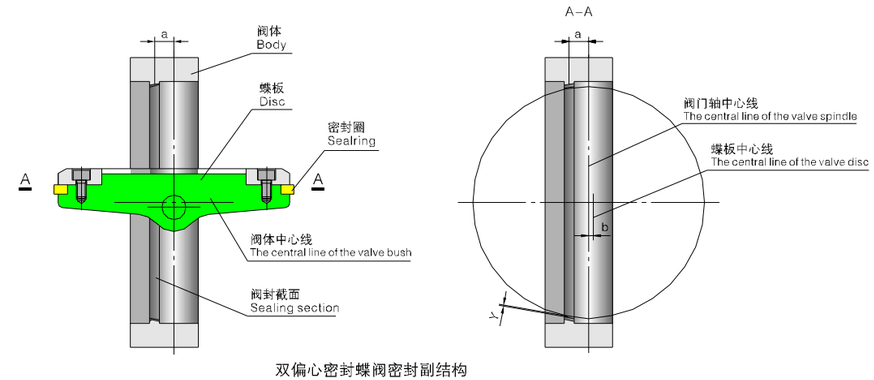

双偏心密封蝶阀密封副结构
The sealing structure of double eccentric seal butterfly valve

2、双偏心密封蝶阀的密封原理

由于在单偏心蝶阀的基础上将蝶板的回转中心(即阀门轴中心)与阀体中心线形成尺寸b偏置，使得蝶阀在开启过程中，蝶板的密封面会比单偏心密封蝶阀更快地脱离阀座密封面，蝶板转动至8°～12°时，蝶板密封面完全脱离阀座密封面，完全开启时，两密封面之间形成一个更大的间隙Y，该类蝶阀的设计，大大降低了两密封面之间的机械磨损及挤压变形，使蝶阀的密封性能更为提高。

2. The sealing principle of the double eccentric seal butterfly valve

As making the center of gyration of the disc (the center of the valve spindle) form a polarization in size(b) with the central line of the valve bush,based on the single eccentric butterfly valve,which makes the sealing section of the disc brake away from the sealing section of the valve seat quicker than the single eccentric seal butterfly valve does,in the course of opening the butterfly valve,when the disc revolves to 8°～12°, thesealing section of the disc will completely brake away from the sealing section of the valve seat,and when completely opened, a bigger gap Y will be formed in two sealing sections. The design of this kind of butterfly valve can greatly decrease the mechanical wear and extrusion and deformation, and improve more the sealing performance of the butterfly valve.

密封原理分析 Sealing principle analysis

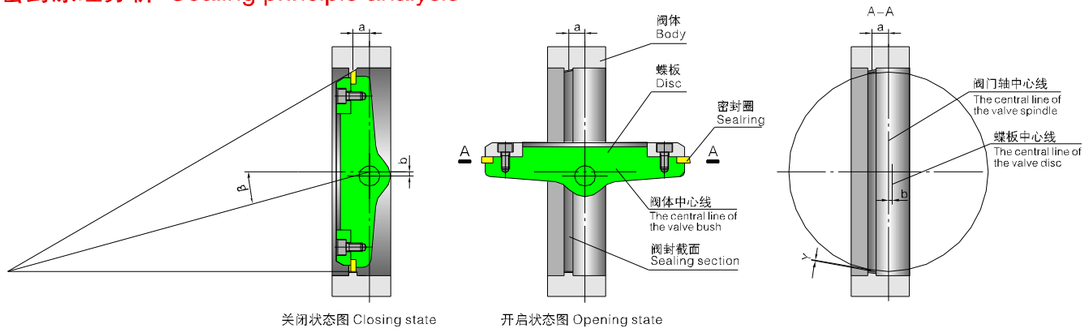

三偏心密封蝶阀密封副结构
The sealing structure of the three eccentric seal butterfly valve

3、三偏心密封蝶阀的密封原理

由于在双偏心蝶阀的基础上将阀座中心线再与阀体中心线形成一个β角偏置，使得蝶阀在开启过程中，蝶板的密封面在开启瞬间立即脱离阀座密封面，而在关闭瞬间才会接触并压紧阀座密封面。当完全开启时，两密封面之间形成一个与双偏心密封蝶阀相同间隙Y，该类蝶阀的设计，彻底消除了两密封面之间的机械磨损和擦伤，使蝶阀的密封性能和使用寿命都得到大大提高。

3. The sealing principle of the three eccentric butterfly valve

As making the central line of the valve seat form a polarization in angle β with the central line of the valve bush, based on the double eccentric butterfly valve,which makes the sealing section of the disc immediately brake away from the sealing section of the valve seat at the moment of opening, and contact the sealing section of the valve seat at the moment of closing,during the course of opening and closing, When completely opened,a gap Y same to the double eccentric seal butterfly valve will be formed in the two sealing sections.The design of this kind of the butterfly valve can completely remove the mechanical wear and scratch between the two sealing section, and greatly improve the sealing performance and life-span of the butterfly valve.

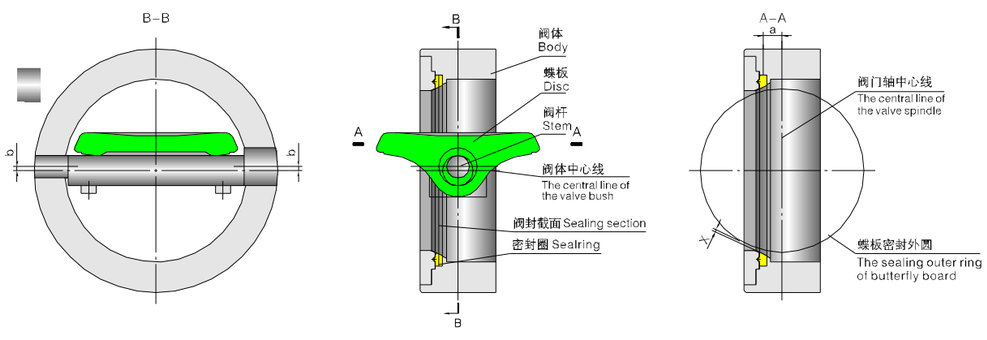

变偏心密封蝶阀密封副结构
The sealing structure of the various eccentric seal butterfly valve

4、变偏心密封蝶阀的密封原理

变偏心蝶阀的独特之处在于安装蝶板的阀杆轴是一个三段轴式结构，此三段轴式阀杆两段轴段同心，而中间段轴中心线与两端轴线偏离一个中心距，蝶板就安装在中间轴段上。这样的偏心结构使得蝶板在全开位置时成为双偏心状，而在蝶板转动到关闭位置时则成为单偏心状。由于偏心轴的作用，在接近关闭时，蝶板向阀座的密封锥面内移进一个距离，蝶板与蝶座的密封面相吻合达到可靠的密封性能。

4. The sealing principle of the various eccentric seal butterfly valve

The unique feature of the various eccentric butterfly valve is the valve handle shaft for installation of the disc, with a structure of three-parts style, There are two parts with a concentric shaft, of the valve handle in three-parts style, but the central line of the middle shaft is a centerline spacing away from the shaft line of the both sides, and the disc is installed in the part of the middle shaft. This eccentric structure can make the disc be in the type of the double eccentric at the situation of fully opened, but in the single eccentric type when the disc is revolved. When approaching closing, the disc will move a distance towards the sealing conic section, and the sealing section of the disc and valve seat is in the reliability of sealing performance, because of the function of the eccentric shaft.

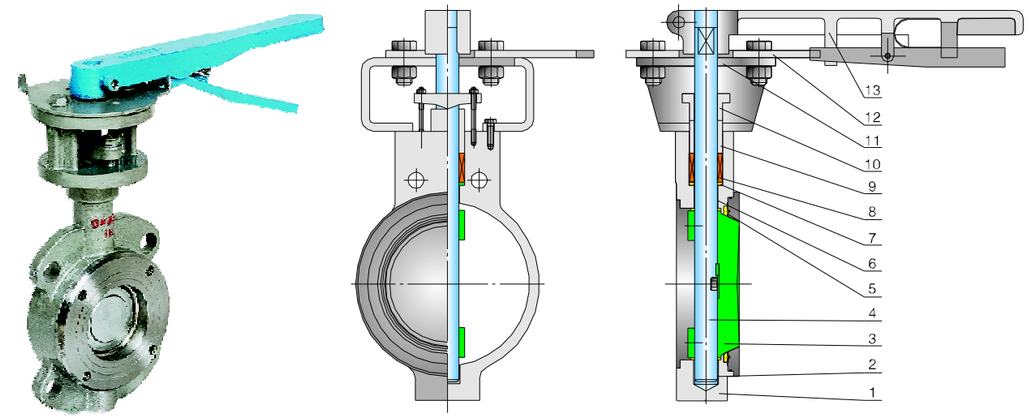

产品采用标准 Technical specification

结构形式 Structural formation	单 偏 心 Single eccentric structure	
设计依据 Design reference	GB	API
驱动方式 Driving manner	手动、蜗轮蜗杆传动、气动、电动 Hand-operated,worm wheel & worm screw pneumatic operated, Electric-driving	
设计标准 Design standard	GB/T 12238	API 609、MSS.SP-68
结构长度 Face to face	GB/T 12221	ASME B16.10、API 609、MSS.SP-68
连接法兰 Flanged ends	JB/T 79、JB/T 82、GB/T9115	ASME B16.5、ASME B16.47
试验和检验 Test & inspection	JB/T 9092	API 598

注：阀门连接法兰及对焊端尺寸可根据用户要求设计制造。
Notes: The sizes of valve connecting flange and butt-welding terminas can be designed according to customer's requirement.

主要零件材料 Major parts material form

序号 No.	零件名称 Part name	材 质 Material	序号 No.	零件名称 Part name	材 质 Material
1	阀体 Body	WCB、CF8、CF8M、CF3、CF3M	8	填料 Packing	柔性石墨 Graphite
2	轴套 Bush	Cu、PTFE+不锈钢	9	填料压盖 Stuffing cover	2Cr13、ASTM A276-420
3	蝶板 Wedge	WCB、CF8、CF8M、CF3、CF3M	10	填料压套 Gland	WCB、CF8、CF8M
4	阀杆 Stem	1Cr13、2Cr13、1Cr18Ni9Ti、0Cr18Ni12Mo2Ti	11	支架 Yoke	WCB、CF8、CF8M、CF3、CF3M
5	密封组合件 Sealing part	A105+橡胶、A105+F6、不锈钢	12	指示板 Indicating plate	Cu、不锈钢
6	轴套 Bush	Cu、PTFE+不锈钢	13	手柄 Wrench	KTH330、QT400-17
7	填料垫 Packing seat	2Cr13			

注：美标相应材质不一一列举
Notes: Relevant material of america standard is not to be particularized respectively.


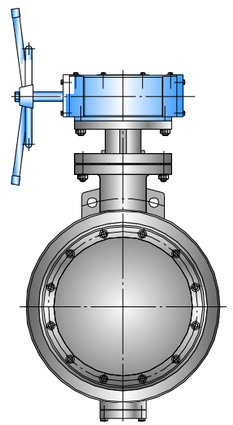
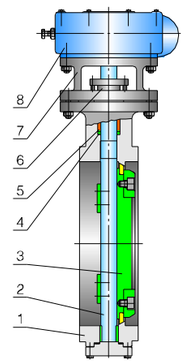

产品采用标准 Technical specification

结构形式 Structural formation	双 偏 心 Double eccentric structure	
设计依据 Design reference	GB	API
驱动方式 Driving manner	手动、蜗轮蜗杆传动、气动、电动 Hand-operated,worm wheel & worm screw pneumatic operated, Electric-driving	
设计标准 Design standard	GB/T 12238	API 609、MSS.SP-68
结构长度 Face to face	GB/T 12221	ASME B16.10、API 609、MSS.SP-68
连接法兰 Flanged ends	JB/T 79、JB/T 82、GB/T9115	ASME B16.5、ASME B16.47
试验和检验 Test & inspection	JB/T 9092	API 598

注：阀门连接法兰及对焊端尺寸可根据用户要求设计制造。
Notes: The sizes of valve connecting flange and butt-welding terminas can be designed according to customer's requirement.

主要零件材料 Major parts material form

序号 No.	零件名称 Part name	材 质 Material	序号 No.	零件名称 Part name	材 质 Material
1	阀体 Body	WCB、CF8、CF8M CF8C、CF3、CF3M	5	填料 Packing	柔性石墨 Graphite
2	阀杆 Stem	1Cr13、2Cr13、1Cr18Ni9Ti、 0Cr18Ni12Mo2Ti	6	填料压盖 Stuffing cover	WCB、CF8、CF8M
3	蝶板组合件 Disc	WCB+F4、WCB+不锈钢复合件 WCB+F6、CF8、CF8M	7	支架 Yoke	WCB、CF8、CF8M、CF3、CF3M
4	填料垫 Packing seat	2Cr13	8	蜗轮蜗杆装置 Worm device	

注：美标相应材质不一一列举
Notes: Relevant material of america standard is not to be particularized respectively.


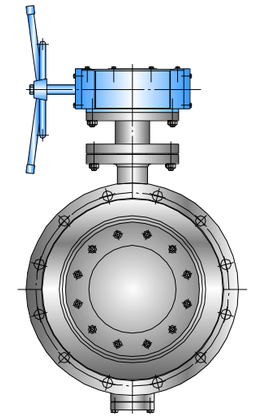
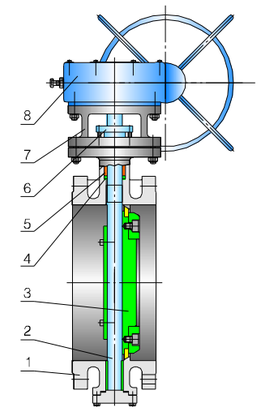

产品采用标准 Technical specification

结构形式 Structural formation	三 偏 心 Three eccentric structure	
设计依据 Design reference	GB	API
驱动方式 Driving manner	手动、蜗轮蜗杆传动、气动、电动 Hand-operated,worm wheel & worm screw pneumatic operated, Electric-driving	
设计标准 Design standard	GB/T 12238	API 609、MSS.SP-68
结构长度 Face to face	GB/T 12221	ASME B16.10、API 609、MSS.SP-68
连接法兰 Flanged ends	JB/T 79、JB/T 82、GB/T9115	ASME B16.5、ASME B16.47
试验和检验 Test & inspection	JB/T 9092	API 598

注：阀门连接法兰及对焊端尺寸可根据用户要求设计制造。
Notes: The sizes of valve connecting flange and butt-welding terminas can be designed according to customer's requirement.

主要零件材料 Major parts material form

序号 No.	零件名称 Part name	材 质 Material	序号 No.	零件名称 Part name	材 质 Material
1	阀体 Body	WCB、CF8、CF8M CF8C、CF3、CF3M	5	填料 Packing	柔性石墨 Graphite
2	阀杆 Stem	1Cr13、2Cr13、1Cr18Ni9Ti、 0Cr18Ni12Mo2Ti	6	填料压盖 Stuffing cover	WCB、CF8、CF8M
3	蝶板组合件 Disc	WCB+F4、WCB+不锈钢复合件 WCB+F6、CF8、CF8M	7	支架 Yoke	WCB、CF8、CF8M、CF3、CF3M
4	填料垫 Packing seat	2Cr13	8	蜗轮蜗杆装置 Worm device	

注：美标相应材质不一一列举
Notes: Relevant material of america standard is not to be particularized respectively.

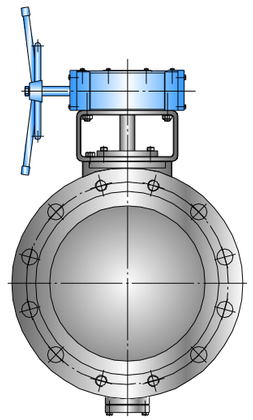

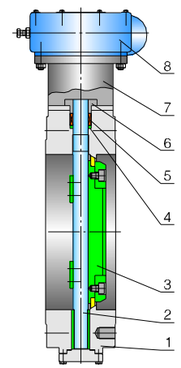

产品采用标准 Technical specification

结构形式 Structural formation	变 偏 心 Variable eccentric structure	
设计依据 Design reference	GB	API
驱动方式 Driving manner	手动、蜗轮蜗杆传动、气动、电动 Hand-operated,worm wheel & worm screw pneumatic operated, Electric-driving	
设计标准 Design standard	GB/T 12238	API 609、MSS.SP-68
结构长度 Face to face	GB/T 12221	ASME B16.10、API 609、MSS.SP-68
连接法兰 Flanged ends	JB/T 79、JB/T 82、GB/T9115	ASME B16.5、ASME B16.47
试验和检验 Test & inspection	JB/T 9092	API 598

注：阀门连接法兰及对焊端尺寸可根据用户要求设计制造。
Notes: The sizes of valve connecting flange and butt-welding terminas can be designed according to customer's requirement.

主要零件材料 Major parts material form

序号 No.	零件名称 Part name	材 质 Material	序号 No.	零件名称 Part name	材 质 Material
1	阀体 Body	WCB、CF8、CF8M CF8C、CF3、CF3M	5	填料 Packing	柔性石墨 Graphite
2	阀杆 Stem	1Cr13、2Cr13、1Cr18Ni9Ti、 0Cr18Ni12Mo2Ti	6	填料压盖 Stuffing cover	WCB、CF8、CF8M
3	蝶板组合件 Disc	WCB+F4、WCB+不锈钢复合件 WCB+F6、CF8、CF8M	7	支架 Yoke	WCB、CF8、CF8M、CF3、CF3M
4	填料垫 Packing seat	2Cr13	8	蜗轮蜗杆装置 Worm device	

注：美标相应材质不一一列举
Notes: Relevant material of america standard is not to be particularized respectively.

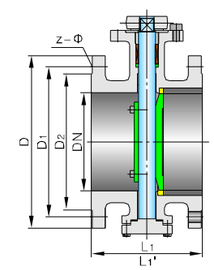

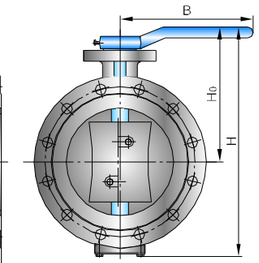

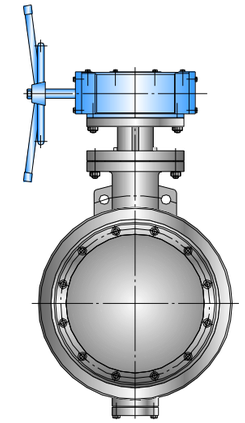

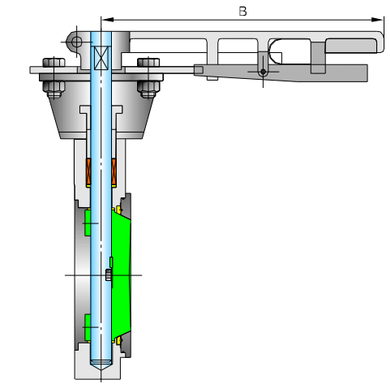

主要外形尺寸 Main size of outside

型号Model：D4(7)2(3、4、5)F(X、H、W、Y)

PN (MPa)	DN (mm)	尺寸 Dimensions (mm)						PN (MPa)	DN (mm)	尺寸 Dimensions (mm)					
		L_1	L_1'	L_2	H_0	H	B			L_1	L_1'	L_2	H_0	H	B
1.0	40	106	140	33	155	208	180	2.5	40	106	140	33	155	208	180
	50	108	150	43	160	225	200		50	108	150	43	160	225	200
	65	112	170	46	175	250	230		65	112	170	46	175	265	230
	80	114	180	49	190	260	250		80	114	180	49	190	275	250
	100	127	190	56	195	295	270		100	127	190	56	205	310	270
	125	140	200	64	215	330	300		125	140	200	64	220	347	300
	150	140	210	70	225	356	350		150	140	210	70	235	374	350
1.6	40	106	140	33	155	208	180	4.0	40	106	140	33	155	208	180
	50	108	150	43	160	225	200		50	108	150	43	160	225	200
	65	112	170	46	175	250	230		65	112	170	46	175	265	230
	80	114	180	49	190	260	250		80	114	180	49	190	275	270
	100	127	190	56	195	295	270		100	127	190	56	205	310	300
	125	140	200	64	215	330	300		125	140	200	64	220	347	350
	150	140	210	70	225	356	350		150	140	210	70	235	374	380

主要外形尺寸 Main size of outside

型号Model：D4(7)2(3、4、5)F(X、H、W、Y)

Class	NPS (in)	尺寸 Dimensions (mm)					Class	NPS (in)	尺寸 Dimensions (mm)				
		L_1	L_2	H_0	H	B			L_1	L_2	H_0	H	B
150	3	114	48	187	262	250	300	3	114	48	198	293	290
	4	127	54	203	308	270		4	127	54	203	310	320
	5	140	55	215	324	300		5	140	55	225	352	350
	6	140	57	224	354	350		6	140	59	235	384	380

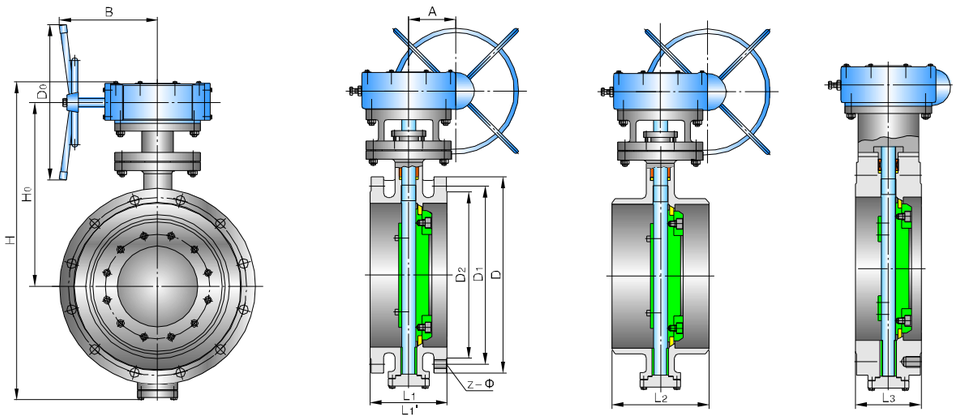

主要外形尺寸 Main size of outside

型号Model：D34(6、7)2(3、4、5)F(X、H、W、Y)

PN (MPa)	DN (mm)	尺寸 Dimensions (mm)									蜗轮蜗杆装置 Worm device
		L_1	L_1'	L_2	L_3	H_0	H	A	B	D_0	
0.6 1.0	65	112	170	170	46	180	290	63	140	180	O型
	80	114	180	180	49	190	320	63	140	180	O型
	100	127	190	190	56	198	342	63	140	240	A型
	150	140	210	210	70	246	415	63	140	240	A型
	200	152	230	230	71	298	470	84	170	300	B型
	250	165	250	250	76	328	535	84	170	300	B型
	300	178	270	270	83	365	606	108	200	400	C型
	350	190	290	290	92	408	695	108	200	400	C型
	400	216	310	310	102	446	755	128	240	400	C型
	450	222	330	330	114	475	815	152	240	600	D型
	500	229	350	350	127	525	905	168	300	600	D型
	600	267	390	390	154	610	1050	320	192	600	D型
	700	292	430	430	165	795	1276	237	192	350	DA型
	800	318	470	470	190	837	1384	237	168	350	DA型
	900	330	510	510	203	885	1500	237	168	350	DA型
	1000	410	550	550	216	946	1620	785	30	450	DB型
	1200	470	630	630	254	1165	2185	785	30	450	DB型
	1400	530	710	710	279	1310	2315	785	30	450	DB型
	1600	600	790	790	318	1440	2675	785	30	450	DB型
	1800	670	870	870	356	1580	2920	865	50	600	DC型
	2000	760	950	950	406	1725	3170	865	50	600	DC型
	2200	760	1000	1000	–	1845	3415	865	50	600	DC型
	2400	760	1100	1100	–	1972	3670	865	50	600	DC型
	2600	760	1200	1200	–	2100	3830	865	50	600	DD型
	2800	760	1300	1300	–	2235	4100	865	50	600	DD型
	3000	760	1400	1400	–	2370	4380	865	50	600	DD型

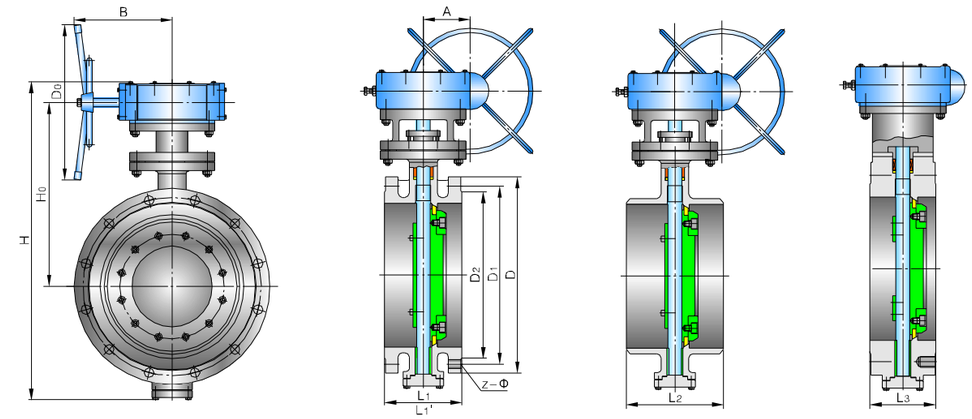

主要外形尺寸 Main size of outside

型号Model：D34(6、7)2(3、4、5)F(X、H、W、Y)

PN (MPa)	DN (mm)	尺寸 Dimensions (mm)									蜗轮蜗杆装置 Worm device
		L_1	L_1'	L_2	L_3	H_0	H	A	B	D_0	
1.6	65	112	170	170	46	175	290	140	63	160	O型
	80	114	180	180	49	185	320	140	63	160	O型
	100	127	190	190	56	195	342	140	63	160	O型
	125	140	200	200	64	209	365	140	63	300	A型
	150	140	210	210	70	243	415	140	63	300	A型
	200	152	230	230	71	263	510	150	84	400	B型
	250	165	250	250	76	295	567	150	84	400	B型
	300	178	270	270	83	342	665	200	108	600	C型
	350	190	290	290	92	385	739	200	108	600	C型
	400	216	310	310	102	430	825	240	152	600	C型
	450	222	330	330	114	469	910	240	152	800	D型
	500	229	350	350	127	500	990	300	168	800	D型
	600	267	390	390	154	618	1210	320	192	800	D型
	700	292	430	430	165	746	1475	237	138	400	DA型
	800	318	470	470	190	810	1600	237	138	400	DA型
	900	330	510	510	203	1000	1870	785	30	400	DA型
	1000	410	550	550	216	1065	2000	785	30	600	DB型
	1200	470	630	630	254	1170	2215	785	30	600	DB型
	1400	530	710	710	279	1319	2430	865	50	800	DC型
	1600	600	790	790	318	1443	2700	865	50	800	DC型
	1800	670	870	870	356	1595	2938	865	50	800	DD型
	2000	760	950	950	406	1743	3210	865	50	800	DD型

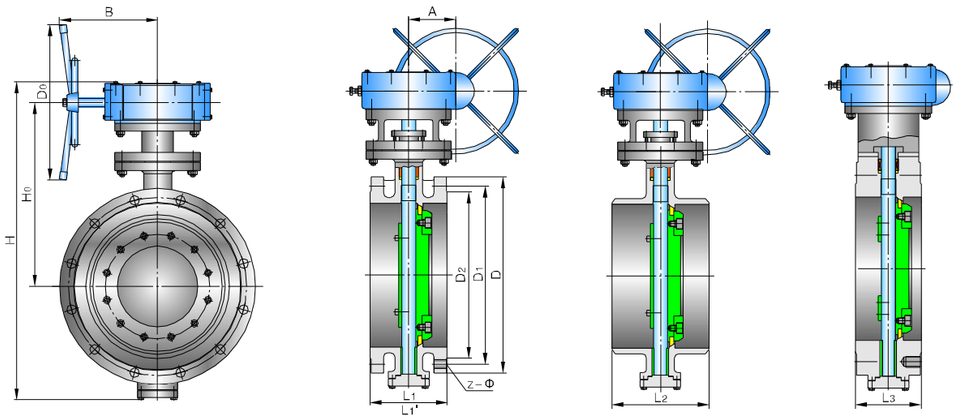

主要外形尺寸 Main size of outside

型号Model：D34(6、7)2(3、4、5)F(X、H、W、Y)

PN (MPa)	DN (mm)	尺寸 Dimensions (mm)									蜗轮蜗杆装置 Worm device
		L_1	L_1'	L_2	L_3	H_0	H	A	B	D_0	
2.5	80	114	180	180	49	185	320	140	63	160	O型
	100	127	190	190	56	200	350	140	63	300	A型
	125	140	200	200	64	210	375	140	63	300	A型
	150	140	210	210	70	245	425	140	63	400	B型
	200	152	230	230	71	270	526	150	84	400	B型
	250	165	250	250	76	302	590	150	84	600	C型
	300	178	270	270	83	360	695	200	108	600	C型
	350	190	290	290	92	420	789	240	108	600	C型
	400	216	310	310	102	435	848	240	128	800	D型
	450	222	330	330	114	475	943	300	152	800	D型
	500	229	350	350	127	550	1079	320	168	800	D型
	600	267	390	390	154	675	1352	237	192	400	DA型
	700	292	430	430	165	759	1495	237	685	400	DA型
	800	318	470	470	190	835	1640	237	685	400	DA型
	900	330	510	510	203	886	1765	785	30	600	DB型
	1000	410	550	550	216	945	1885	785	30	600	DB型
	1200	470	630	630	254	1055	2100	865	50	800	DC型
	1400	530	710	710	279	1163	2325	865	50	800	DC型
4.0	80	180	–	180	49	245	395	140	63	300	A型
	100	190	–	190	56	205	356	140	63	400	B型
	125	200	–	200	64	213	375	140	63	400	B型
	150	210	–	210	70	260	439	150	84	600	C型
	200	230	–	230	71	275	520	150	84	600	C型
	250	250	–	250	76	315	600	200	108	600	C型
	300	270	–	270	83	365	692	200	108	800	D型
	350	290	–	290	127	408	776	240	152	800	D型
	400	310	–	310	140	443	864	300	168	800	D型
	500	350	–	350	170	525	1128	168	237	400	DA型
	600	390	–	390	200	664	1257	168	237	400	DA型

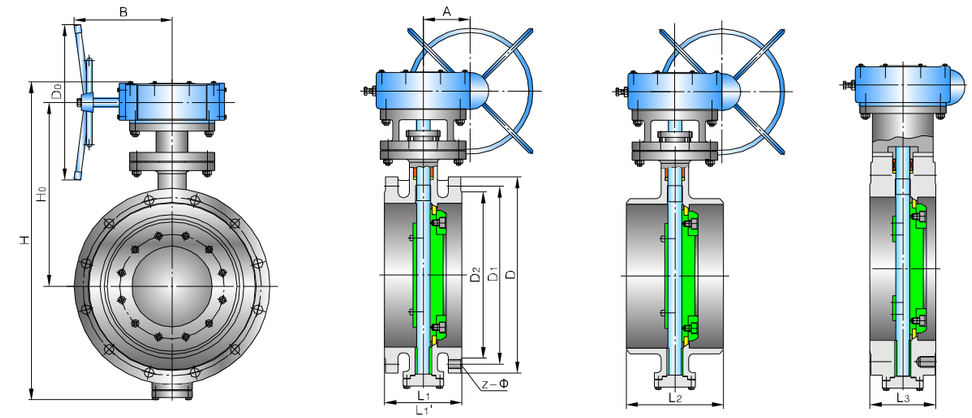

主要外形尺寸 Main size of outside

型号Model：D34(6、7)2(3、4、5)F(X、H、W、Y)

PN (MPa)	DN (mm)	尺寸 Dimensions (mm)								蜗轮蜗杆装置 Worm device
		L_1	L_2	L_3	H_0	H	A	B	D_0	
6.4	80	180	180	70	192	388	140	63	400	B型
	100	190	190	76	205	395	140	63	400	B型
	125	200	200	86	225	420	150	84	600	C型
	150	210	210	100	265	498	200	108	600	C型
	200	230	230	116	292	540	240	152	600	C型
	250	250	250	128	328	638	300	168	800	D型
	300	270	270	150	372	725	320	192	800	D型
	350	290	290	165	418	800	168	237	800	D型
	400	310	310	175	450	890	168	237	400	DA型
	500	350	350	195	624	1158	168	237	400	DA型
	600	390	390	215	678	1580	168	237	400	DA型
10.0	80	180	180	85	250	500	140	63	400	B型
	100	190	190	90	340	595	140	63	600	C型
	125	200	200	100	395	680	200	108	600	C型
	150	210	210	120	425	730	240	152	600	C型
	200	230	230	138	448	848	300	168	800	D型
	250	250	250	152	537	1000	320	192	800	D型
	300	270	270	176	615	1145	168	237	800	D型
	350	290	290	182	673	1200	168	237	400	DA型
	400	310	310	204	814	1345	168	237	400	DA型
	500	350	350	232	946	1506	275	333	600	DB型
	600	390	390	248	998	1618	275	333	600	DC型

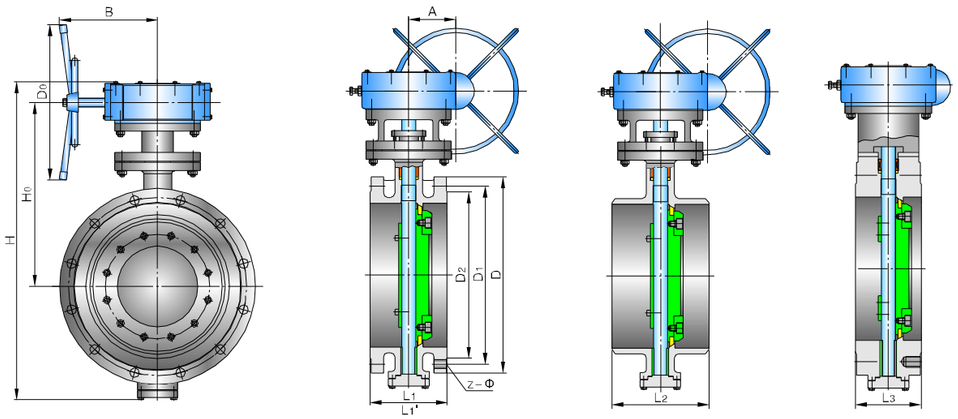

主要外形尺寸 Main size of outside

型号Model：D34(6、7)2(3、4、5)F(X、H、W、Y)

Class	NPS (in)	尺寸 Dimensions (mm)								蜗轮蜗杆装置 Worm device
		L_1	L_2	L_3	H_0	H	A	B	D_0	
150	3	114	114	48	185	320	140	63	160	O型
	4	127	127	54	195	342	140	63	160	O型
	5	140	140	55	209	365	140	63	300	A型
	6	140	140	57	243	415	140	63	300	A型
	8	152	152	64	263	510	150	84	400	B型
	10	165	165	71	295	567	150	84	400	B型
	12	178	178	81	342	665	200	108	600	C型
	14	190	190	92	385	739	200	108	600	C型
	16	216	216	102	430	825	240	152	600	C型
	18	222	222	114	469	910	240	152	800	D型
	20	229	229	127	500	990	300	168	800	D型
	24	267	267	154	618	1210	320	192	800	D型
	28	292	292	229	746	1475	237	168	400	DA型
	32	318	318	241	810	1600	237	168	400	DA型
	34	330	330	241	875	1728	237	168	400	DA型
	40	410	410	300	965	1900	237	168	600	DB型

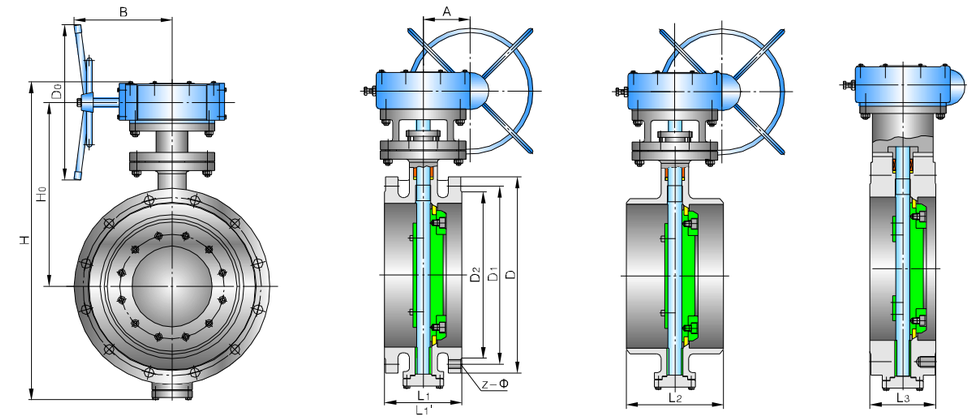

主要外形尺寸 Main size of outside

型号Model：D34(6、7)2(3、4、5)F(X、H、W、Y)

Class	NPS (in)	尺寸 Dimensions (mm)								蜗轮蜗杆装置 Worm device
		L_1	L_2	L_3	H_0	H	A	B	D_0	
300	3	180	180	48	241	395	140	63	300	A型
	4	190	190	54	205	355	140	63	400	B型
	5	200	200	55	215	378	140	63	400	B型
	6	210	210	59	260	430	150	84	600	C型
	8	230	230	73	273	523	150	84	600	C型
	10	250	250	83	315	600	200	108	600	D型
	12	270	270	92	362	693	200	108	800	D型
	14	290	290	117	405	772	240	152	800	D型
	16	310	310	133	440	862	300	168	800	DA型
	18	330	330	149	525	960	320	192	400	DA型
	20	350	350	159	603	1158	168	237	400	DA型
	24	390	390	181	693	1320	168	237	300	A型
600	3	180	180	54	250	500	140	63	400	B型
	4	190	190	64	340	595	140	63	600	C型
	5	200	200	70	395	680	200	108	600	C型
	6	210	210	78	423	730	240	152	600	C型
	8	230	230	102	445	855	300	168	800	D型
	10	250	250	117	536	1002	320	192	800	D型
	12	270	270	140	614	1150	168	237	800	D型
	14	290	290	155	674	1200	168	237	400	DA型
	16	310	310	178	823	1345	168	237	400	DA型

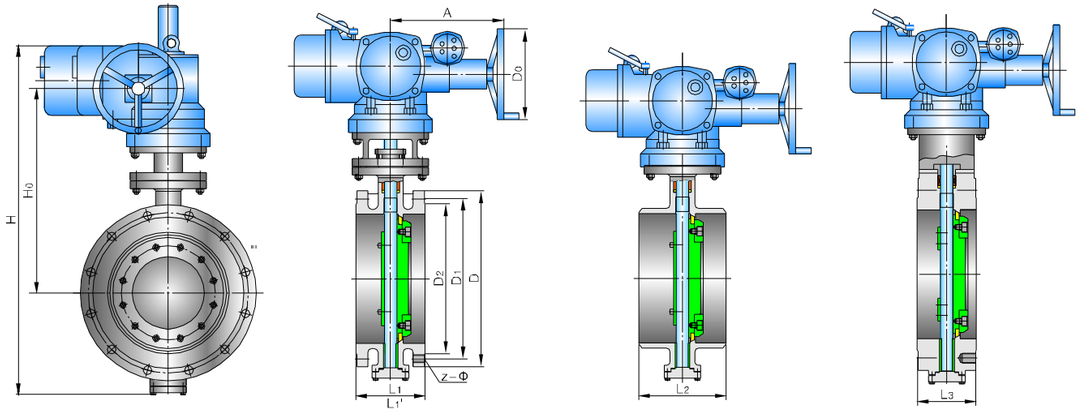

主要外形尺寸 Main size of outside

型号Model：D94(6、7)2(3、4、5)F(X、H、W、Y)

PN (MPa)	DN (mm)	尺寸 Dimensions (mm)									电动装置 Electric device
		L_1	L_1'	L_2	L_3	H_0	H	A	B	D_0	
0.6	80	114	180	180	49	185	320	180	178	–	DQW10-1
	100	127	190	190	56	198	340	180	178	–	DQW20-1
	150	140	210	210	70	241	415	180	178	–	DQW20-1
	200	152	230	230	71	263	512	370	235	365	DZW10
	250	165	250	250	76	292	570	370	235	365	DZW10
	300	178	270	270	83	340	668	370	235	365	DZW20(I)
	350	190	290	290	92	385	745	370	235	365	DZW20(I)
	400	216	310	310	102	425	827	370	235	365	DZW30(I)
	450	222	330	330	114	462	915	370	235	365	DZW30(I)
	500	229	350	350	127	500	995	370	235	365	DZW30(I)
	600	267	390	390	154	605	1183	515	245	470	DZW60
	700	292	430	430	165	734	1460	515	245	470	DZW60
	800	318	470	470	190	803	1589	515	245	470	DZW60
	900	330	510	510	203	990	1856	540	360	550	DZW90(I)
	1000	410	550	550	216	1050	1958	540	360	550	DZW90(I)
	1200	470	630	630	254	1165	2013	540	360	550	DZW120(I)
	1400	530	710	710	297	1312	2186	540	360	550	DZW120(I)
	1600	600	790	790	318	1438	2531	565	385	320	DZW250
	1800	670	870	870	356	1580	2795	565	385	320	DZW250
	2000	760	950	950	406	1726	3055	770	300	570	DZW500

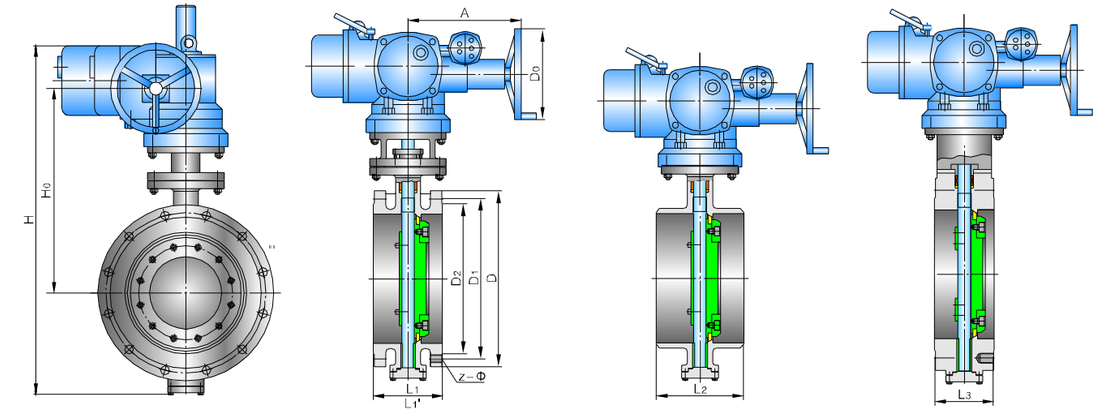

主要外形尺寸 Main size of outside

型号Model：D94(6、7)2(3、4、5)F(X、H、W、Y)

PN (MPa)	DN (mm)	尺寸 Dimensions (mm)									电动装置 Electric device
		L_1	L_1'	L_2	L_3	H_0	H	A	B	D_0	
1.0	80	114	180	180	49	185	320	180	178	–	DQW10-1
	100	127	190	190	56	198	340	180	178	–	DQW10-1
	125	140	200	200	64	205	115	180	178	–	DQW20-1
	150	140	210	210	70	241	415	180	178	–	DQW20-1
	200	152	230	230	71	263	512	370	235	365	DZW10
	250	165	250	250	76	292	570	370	235	365	DZW10
	300	178	270	270	83	340	668	370	235	365	DZW20(I)
	350	190	290	290	92	385	745	370	235	365	DZW20(I)
	400	216	310	310	102	425	827	370	235	365	DZW30(I)
	450	222	330	330	114	462	915	370	235	365	DZW30(I)
	500	229	350	350	127	500	995	370	235	365	DZW30(I)
	600	267	390	390	154	605	1183	515	245	470	DZW60
	700	292	430	430	165	734	1460	515	245	470	DZW60
	800	318	470	470	190	803	1589	515	245	470	DZW60
	900	330	510	510	203	990	1856	540	360	550	DZW90(I)
	1000	410	550	550	216	1050	1958	540	360	550	DZW90(I)
	1200	470	630	630	254	1165	2013	540	360	550	DZW120(I)
	1400	530	710	710	279	1312	2186	540	360	550	DZW120(I)
	1600	600	790	790	318	1438	2531	565	385	320	DZW250
	1800	670	870	870	356	1580	2795	565	385	320	DZW250
	2000	760	950	950	406	1726	3055	770	300	570	DZW500

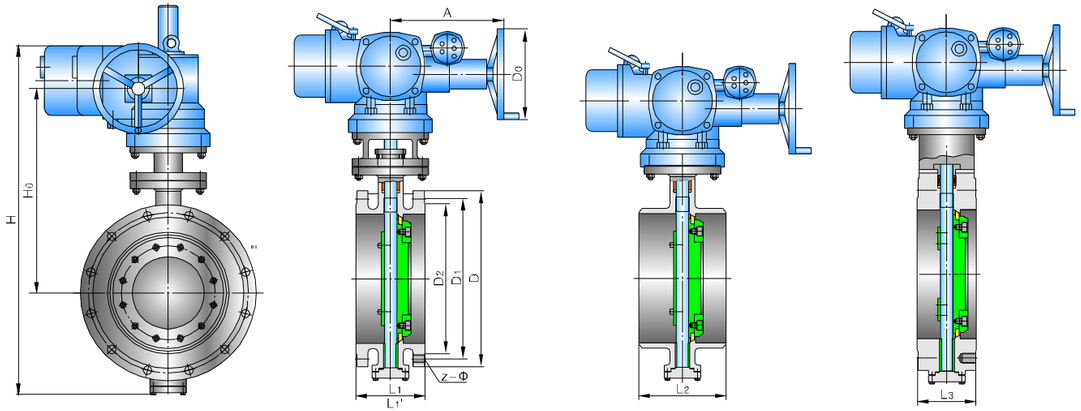

主要外形尺寸 Main size of outside

型号Model：D94(6、7)2(3、4、5)F(X、H、W、Y)

PN (MPa)	DN (mm)	尺寸 Dimensions (mm)									电动装置 Electric device
		L_1	L_1'	L_2	L_3	H_0	H	A	B	D_0	
1.6	80	114	180	180	49	265	513	180	178	–	DQW10-1
	100	127	190	190	56	282	538	180	178	–	DQW20-1
	125	140	200	200	64	295	560	180	178	–	DQW20-1
	150	140	210	210	70	300	605	180	178	–	DQW20-1
	200	152	230	230	71	321	749	370	235	365	DZW10
	250	165	250	250	76	330	803	370	235	365	DZW10
	300	178	270	270	83	365	880	370	235	365	DZW20(I)
	350	190	290	290	92	410	960	370	235	365	DZW20(I)
	400	216	310	310	102	445	1032	370	235	365	DZW20(I)
	450	222	330	330	114	487	1118	370	235	365	DZW30(I)
	500	229	350	350	127	520	1190	370	235	365	DZW30(I)
	600	267	390	390	154	625	1380	370	235	365	DZW30(I)
	700	292	430	430	165	745	1582	515	245	470	DZW60
	800	318	470	470	190	810	1713	515	245	470	DZW60
	900	330	510	510	203	875	1870	540	360	550	DZW90(I)
	1000	410	550	550	216	940	2000	540	360	550	DZW90(I)
	1200	470	630	630	254	1060	2118	540	360	550	DZW120(I)
	1400	530	710	710	279	1325	2328	565	385	320	DZW250
	1600	600	790	790	318	1450	2550	565	385	320	DZW250
	1800	670	870	870	356	1598	2816	770	300	570	DZW500
	2000	760	950	950	406	1743	3065	794	684	500	DZW800

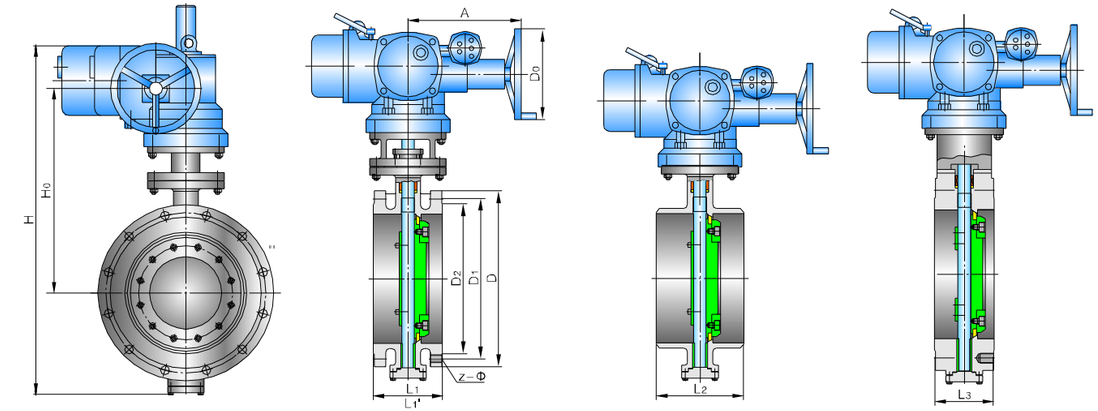

主要外形尺寸 Main size of outside

型号Model：D94(6、7)2(3、4、5)F(X、H、W、Y)

PN (MPa)	DN (mm)	尺寸 Dimensions (mm)									电动装置 Electric device
		L_1	L_1'	L_2	L_3	H_0	H	A	B	D_0	
2.5	80	114	180	180	49	265	552	180	178	–	DQW20-1
	100	127	190	190	56	290	585	180	178	–	DQW20-1
	125	140	200	200	64	305	610	180	178	–	DQW20-1
	150	140	210	210	70	315	765	180	178	–	DQW20-1
	200	152	230	230	71	304	820	370	235	365	DZW15
	250	165	250	250	76	336	910	370	235	365	DZW15
	300	178	270	270	83	386	1000	370	235	365	DZW30(I)
	350	190	290	290	92	425	1055	370	235	365	DZW30(I)
	400	216	310	310	102	456	1108	370	235	365	DZW30(I)
	450	222	330	330	114	490	1140	370	235	365	DZW30(I)
	500	229	350	350	127	552	1238	370	235	365	DZW30(I)
	600	267	390	390	154	635	1399	515	245	470	DZW60
	700	292	430	430	165	750	1611	540	360	550	DZW90(I)
	800	318	470	470	190	820	1782	540	360	550	DZW120(I)
	900	330	510	510	203	886	1915	565	385	320	DZW250
	1000	410	550	550	216	945	2040	565	385	320	DZW250
	1200	470	630	630	254	1053	2184	770	300	570	DZW500
	1400	530	710	710	297	1164	2375	794	684	500	DZW800
4.0	80	180	–	180	49	240	530	180	178	–	DQW20-1
	100	190	–	190	56	205	555	180	178	–	DQW20-1
	125	200	–	200	64	215	582	180	178	–	DQW30-1
	150	210	–	210	70	260	609	370	235	365	DZW30(I)
	200	230	–	230	93	275	755	370	235	365	DZW30(I)
	250	250	–	250	114	315	818	370	235	365	DZW30(I)
	300	270	–	270	136	363	912	515	245	470	DZW45(I)
	350	290	–	290	128	406	983	515	245	470	DZW45(I)
	400	310	–	310	146	440	1058	515	245	470	DZW60(I)
	500	350	–	350	186	600	1245	540	360	550	DZW90
	600	390	–	390	211	663	1414	540	360	550	DZW120(I)

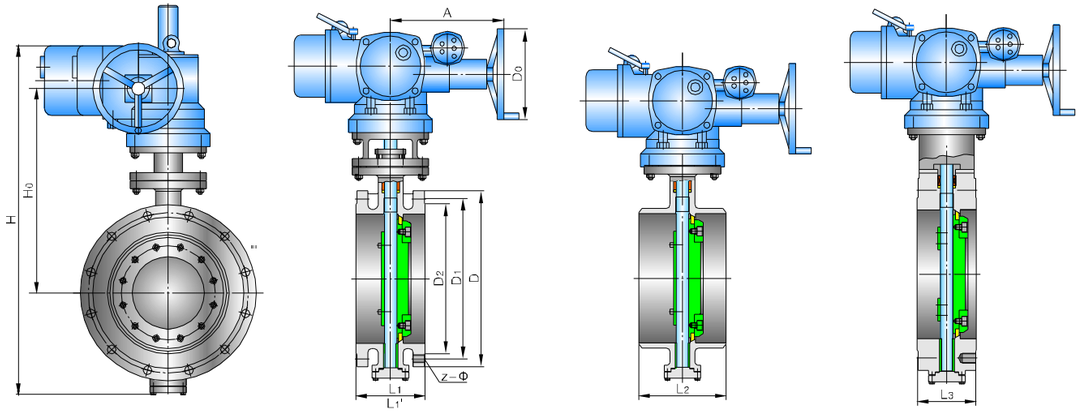

主要外形尺寸 Main size of outside

型号Model：D94(6、7)2(3、4、5)F(X、H、W、Y)

PN (MPa)	DN (mm)	尺寸 Dimensions (mm)								电动装置 Electric device
		L_1	L_2	L_3	H_0	H	A	B	D_0	
6.4	80	180	180	70	242	543	180	178	–	DQW20-1
	100	190	190	76	204	578	180	178	–	DQW20-1
	125	200	200	86	214	607	180	178	–	DQW30-1
	150	210	210	100	259	659	370	235	365	DZW30(I)
	200	230	230	116	285	795	370	235	365	DZW30(I)
	250	250	250	128	325	885	370	235	365	DZW30(I)
	300	270	270	150	375	1050	515	245	470	DZW45(I)
	350	290	290	165	415	825	515	245	470	DZW45(I)
	400	310	310	175	452	1205	515	245	470	DZW60(I)
	500	350	350	195	625	1470	540	360	550	DZW90
	600	390	390	215	675	1582	540	360	550	DZW120(I)
10.0	80	180	180	85	108	608	180	178	–	DQW20-1
	100	190	190	90	108	648	180	178	–	DQW20-1
	125	200	200	100	120	692	180	178	–	DQW30-1
	150	210	210	120	135	740	370	235	365	DZW30(I)
	200	230	230	138	445	1058	370	235	365	DZW30(I)
	250	250	250	152	536	1175	370	235	365	DZW30(I)
	300	270	270	176	615	1390	515	245	470	DZW45(I)
	350	290	290	182	675	1475	515	245	470	DZW60
	400	310	310	204	820	1705	540	360	550	DZW90
	500	350	350	232	946	1806	540	360	550	DZW120(I)
	600	390	390	248	998	1918	540	360	550	DZW120(I)

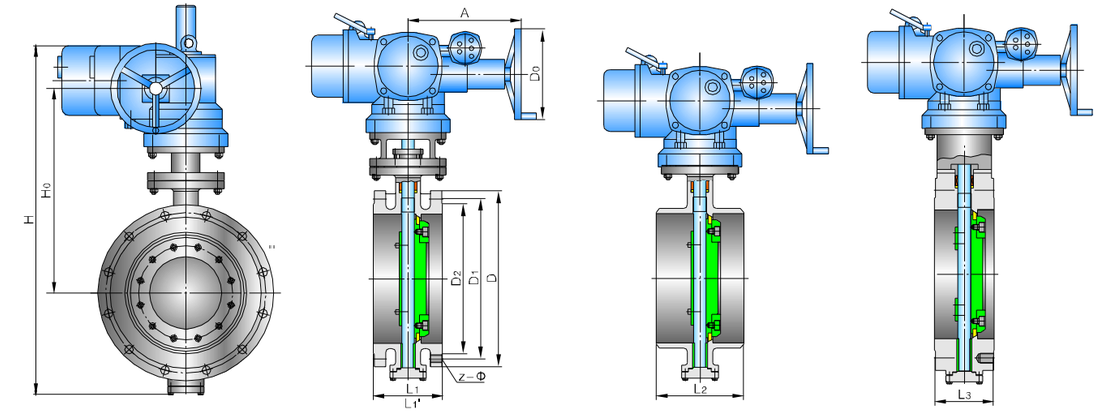

主要外形尺寸 Main size of outside

型号Model：D94(6、7)2(3、4、5)F(X、H、W、Y)

Class	NPS (in)	尺寸 Dimensions (mm)								电动装置 Electric device
		L_1	L_2	L_3	H_0	H	A	B	D_0	
150	3	114	114	48	263	513	180	178	–	DQW10-1
	4	127	127	54	282	535	180	178	–	DQW20-1
	5	140	140	55	293	563	180	178	–	DQW20-1
	6	140	140	57	322	602	180	178	–	DQW20-1
	8	152	152	64	296	745	370	235	365	DZW10
	10	165	165	70	325	805	370	235	365	DZW10
	12	178	178	81	365	883	370	235	365	DZW20(I)
	14	190	190	92	408	965	370	235	365	DZW20(I)
	16	216	216	102	443	1033	370	235	365	DZW20(I)
	18	222	222	114	485	1120	370	235	365	DZW30(I)
	20	229	229	127	518	1186	370	235	365	DZW30(I)
	24	267	267	154	625	1380	370	235	365	DZW30(I)
	28	292	292	229	745	1587	515	245	470	DZW60
	32	318	318	241	810	1717	515	245	470	DZW60
	34	330	330	241	872	1874	540	360	550	DZW90(I)
	40	410	410	300	965	2030	540	360	550	DZW90(I)

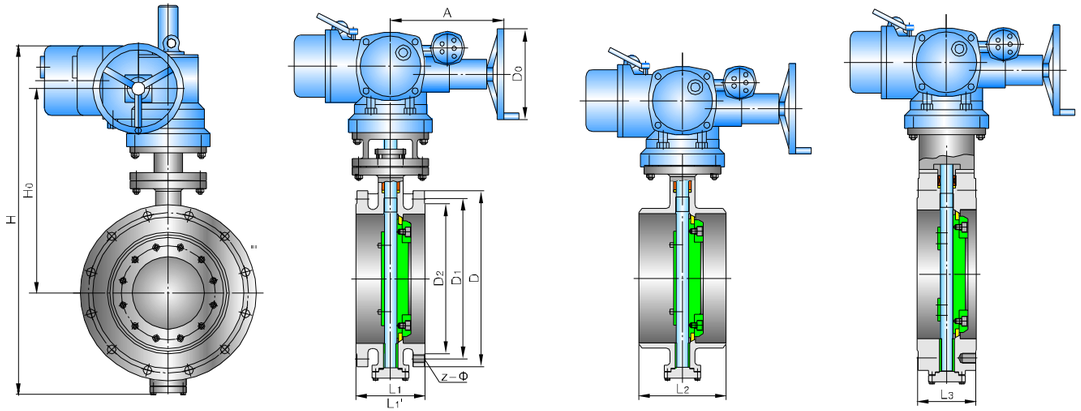

主要外形尺寸 Main size of outside

型号Model：D94(6、7)2(3、4、5)F(X、H、W、Y)

Class	NPS (in)	尺寸 Dimensions (mm)								电动装置 Electric device
		L_1	L_2	L_3	H_0	H	A	B	D_0	
300	3	180	180	48	242	530	180	178	–	DQW20-1
	4	190	190	54	204	552	180	178	–	DQW20-1
	5	200	200	55	214	580	180	178	–	DQW30-1
	6	210	210	59	259	610	180	178	–	DZW30-1
	8	230	230	73	310	755	370	235	365	DZW20(I)
	10	250	250	83	340	816	370	235	365	DZW20(I)
	12	270	270	92	390	912	370	235	365	DZW30(I)
	14	290	290	117	425	980	370	235	365	DZW30(I)
	16	310	310	133	460	1057	370	235	365	DZW30(I)
	18	330	330	149	525	1140	370	235	365	DZW30(I)
	20	350	350	159	556	1243	515	245	470	DZW60
	24	390	390	181	653	1420	540	360	550	DZW90(I)
600	3	180	180	64	108	606	180	178	–	DQW20-1
	4	190	190	64	108	650	180	178	–	DQW20-1
	5	200	200	70	120	695	180	178	–	DQW30-1
	6	210	210	76	136	743	180	178	–	DQW30-1
	8	230	230	89	442	1055	370	235	365	DZW30(I)
	10	250	250	114	532	1172	370	235	365	DZW30(I)
	12	270	270	127	618	1392	515	245	470	DZW45(I)
	14	290	290	140	674	1475	515	245	470	DZW60
	16	310	310	152	823	1708	540	360	550	DZW90

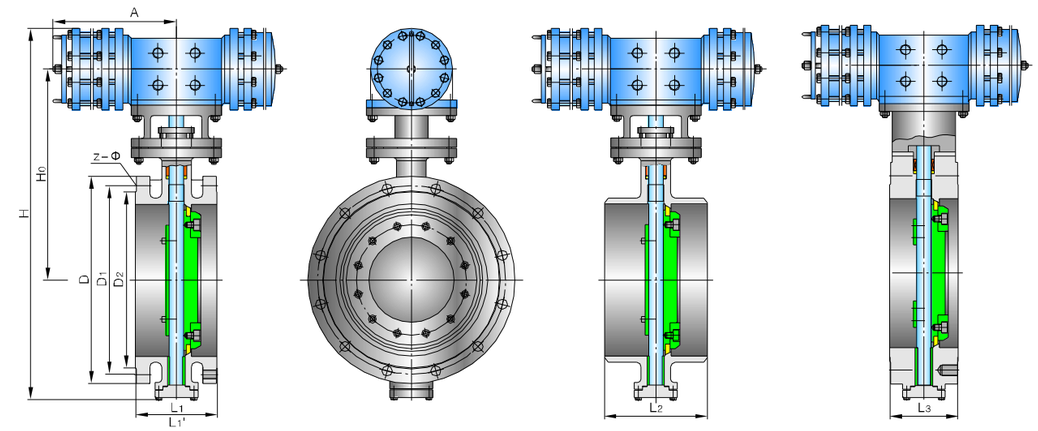

主要外形尺寸 Main size of outside

型号Model：D64(6、7)2(3、4、5)F(X、H、W、Y)

PN (MPa)	DN (mm)	尺寸 Dimensions (mm)							气动装置 Pneumatic device
		L_1	L_1'	L_2	L_3	H_0	H	A	
0.6	200	152	230	230	71	325	695	275	TAW13
	250	165	250	250	76	355	750	275	TAW13
	300	178	270	270	83	475	935	378	TAW17
	350	190	290	290	92	510	1000	378	TAW17
	400	216	310	310	102	590	1145	378	TAW17
	450	222	330	330	114	632	1205	530	TAW20
	500	229	350	350	127	665	1256	530	TAW20
	600	267	390	390	154	830	1526	530	TAW20
	700	292	430	430	165	903	1640	530	TAW20
	800	318	470	470	190	972	1786	680	TAW28
	900	330	510	510	203	1052	1917	680	TAW28
	1000	410	550	550	216	1170	2600	680	TAW28
1.0	200	152	230	230	71	367	740	275	TAW13
	250	165	250	250	76	443	900	378	TAW17
	300	178	270	270	83	493	990	378	TAW17
	350	190	290	290	92	575	1155	378	TAW17
	400	216	310	310	102	600	1205	530	TAW20
	450	222	330	330	114	643	1290	530	TAW20
	500	229	350	350	127	705	1395	530	TAW20
	600	267	390	390	154	838	1665	530	TAW20
	700	292	430	430	165	942	1882	680	TAW28
	800	318	470	470	190	1066	2093	680	TAW28

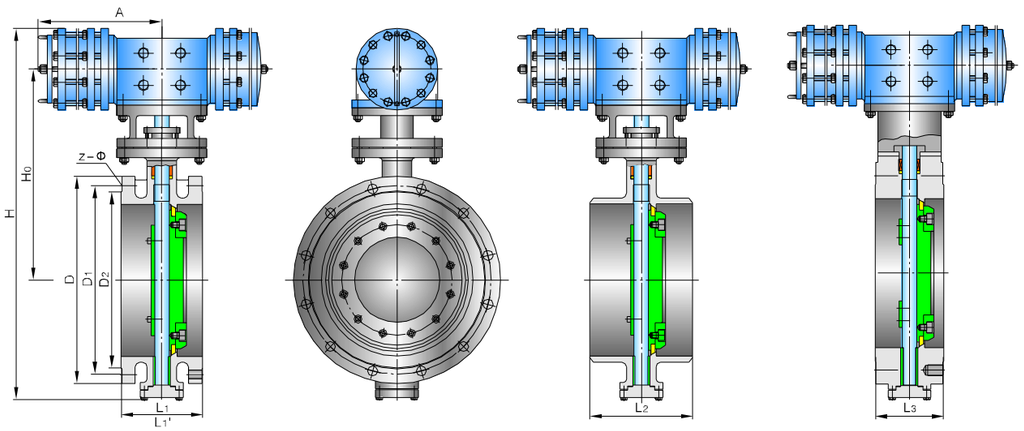

主要外形尺寸 Main size of outside

型号Model：D64(6、7)2(3、4、5)F(X、H、W、Y)

PN (MPa)	DN (mm)	尺寸 Dimensions (mm)							气动装置 Pneumatic device
		L_1	L_1'	L_2	L_3	H_0	H	A	
1.6	200	152	230	230	71	327	695	275	TAW13
	250	165	250	250	76	355	750	275	TAW13
	300	178	270	270	83	472	955	378	TAW17
	350	190	290	290	92	515	1033	378	TAW17
	400	216	310	310	102	595	1185	530	TAW20
	450	222	330	330	114	632	1270	530	TAW20
	500	229	350	350	127	665	1335	530	TAW20
	600	267	390	390	154	829	1642	680	TAW28
	700	292	430	430	165	905	1785	680	TAW28
	800	318	470	470	190	970	1915	680	TAW28
2.5	200	152	230	230	71	367	740	275	TAW13
	250	165	250	250	76	443	890	378	TAW17
	300	178	270	270	83	495	985	378	TAW17
	350	190	290	290	92	575	1155	530	TAW20
	400	216	310	310	102	603	1206	530	TAW20
	450	222	330	330	114	643	1284	530	TAW20
	500	229	350	350	127	705	1390	535	TAW20
	600	267	390	390	154	835	1660	680	TAW28
4.0	200	230	–	230	71	375	750	275	TAW13
	250	250	–	250	76	445	905	378	TAW17
	300	270	–	270	83	538	1085	503	TAW20
	350	290	–	290	127	576	1160	503	TAW20
	400	310	–	310	140	609	1230	503	TAW20
	500	350	–	350	170	765	1520	680	TAW28

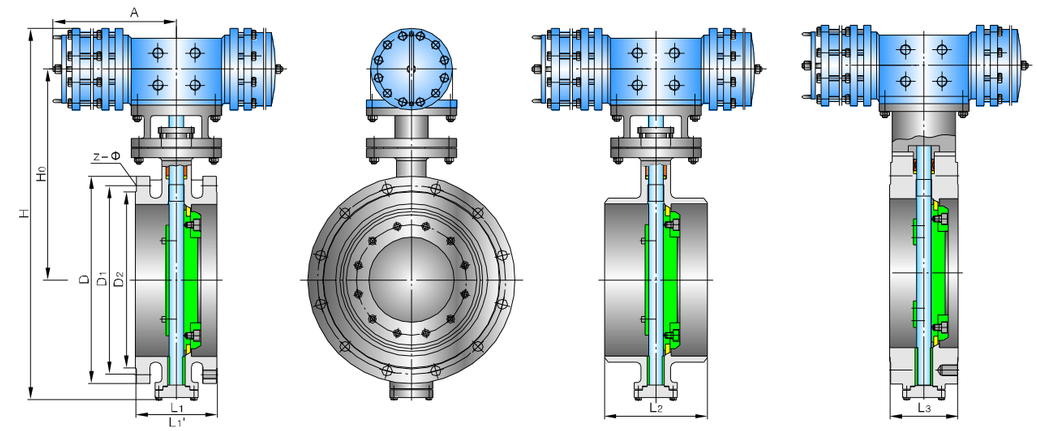

主要外形尺寸 Main size of outside

型号Model：D64(6、7)2(3、4、5)F(X、H、W、Y)

Class	NPS (in)	尺寸 Dimensions (mm)						电动装置 Electric device
		L_1	L_2	L_3	H_0	H	A	
150	8	152	152	64	323	690	275	TAW13
	10	165	165	70	355	750	275	TAW13
	12	178	178	81	475	955	378	TAW17
	14	190	190	92	513	1032	378	TAW17
	16	216	216	102	598	1182	530	TAW20
	18	222	222	114	635	1265	530	TAW20
	20	229	229	127	667	1335	530	TAW20
	24	267	267	154	830	1642	680	TAW28
	28	292	292	229	910	1782	680	TAW28
	32	318	318	241	975	1920	680	TAW28
300	8	230	230	73	368	750	275	TAW13
	10	250	250	83	442	909	378	TAW17
	12	270	270	92	535	1075	530	TAW20
	14	290	290	117	572	1158	530	TAW20
	16	310	310	133	610	1230	530	TAW20
	18	330	330	149	736	1462	680	TAW28
	20	350	350	159	765	1328	680	TAW28

卓越品质 • 成就方圆

Excellent quality makes
Fangyuan a great achievement

电站阀系列

Electric station valve series

焊接式电站截止阀

焊接式电站截止阀

Y型电站截止阀

电动电站截止阀

电动电站闸阀

焊接电站闸阀

电动电站闸阀

FYV

焊接式电站截止阀

焊接式电站截止阀

焊接式电站截止阀

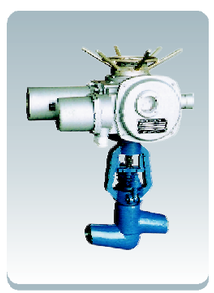

电动电站截止阀

型号编制说明 Model schedule illustration

□ □ □ □ □ □ □ □

- 阀体材料代号 Body material code
- 压力等级代号 Pressure grade code
- 密封面材质代号 Sealing formation code
- 结构形式代号 Design feature code
- 连接形式代号 Connecting type code
- 驱动方式代号 Driving manner code
- 阀门类型代号 Valve type code
- 口径代号 Code of aperture

● 口径代号：公称通径
Code of aperture: DN

● 阀门类型代号：Z—闸阀　J—截止阀　H—止回阀
Valve type code: Z—Gate valve　J—Globe valve　H—Check valve

● 驱动方式代号：3—蜗轮蜗杆　4—正齿轮　5—伞齿轮　6—气动　9—电动(手动省略)
Driving manner code: 3—Worm gear worm　4—Spur gear　5—Bevel gear
6—Air driving　9—Electric driving(Hand wheel driving omitted)

● 连接形式代号：6—焊接　8—承插焊
Connecting type code: 6—Welding　8—Bear and insert welding

● 结构形式代号：0—弹性闸板　2—双闸板
Design feature code:0—Flexible wedge　2—Double gate

● 密封面材质代号：H—13Cr　Y—Stellite
Sealing formation code: H—13Cr　Y—Stellite

● 压力等级代号：1500Lb 2000Lb 2500Lb 3000Lb 3500Lb
Pressure grade code: 1500Lb 2000Lb 2500Lb 3000Lb 3500Lb

● 阀体材料代号：C—WCB　C1—WC1　I—WC6　V—WC9　C12—C12A
Body material code: C—WCB　C1—WC1　I—WC6　V—WC9　C12—C12A

例：8"Z960Y1500LbC9

注释：8"-1500Lb焊接端电动闸阀(手动代号省略)，弹性闸板密封面材料Stellite阀体材料WC9。

For example: 8"Z960Y1500LbC9

Note: 8"-1500Lb welded-end electric gate valve (manually actuation's code is omitted), the sealing face material of elastic wedge disc Stellite, body material Wc9.

产品结构特点 Products design features

1、操作传动方式有：手动、电动、正、伞齿轮传动、气动等，订货时应注明传动方式。
Actuation modes: manual, electric, spur and bevel gear, pneumatic actuations, please make it clear at order.

2、焊接连接的闸阀、截止阀适用于公称压力PN1.6～32.0MPa，及P54/100V～P57/170V，工作温度≤540℃(其中P57/170V工作温度570℃)的石油、化工、火力、水力各种系统的管路上，切断和接通管路介质。适用介质为：水、蒸汽、油品、酸性介质等。
Weld-connected gate valve and stop valve are suitable for the pipeline of PN1.6~32.0Mpa, P54/100V~P57/170V, a working temperature ≤540℃ (570℃ for P57/170V) in various systems of petroleum, chemical industry, steam power, hydraulic etc. to cut off and get through the medium. The suitable media are: water, steam, oil goods, acid media and so on.

3、符合国内外先进标准的要求，阀门中腔采用压力自紧式密封结构，支管两端采用焊接结构，焊接坡口可按标准或用户要求配接，密封可靠、性能良好、造型美观。
Conforms with the requirements of the domestic and foreign advanced standards. The middle cavity of the valve uses the pressure self-tightening sealing structure, the two ends of the branch pipe use welded structure and the welded groove can be connected per either the standard or the required one by users. Of a reliable seal, good performance and nice modeling.

4、阀瓣、阀座密封面根据不同的要求采用铁基合金堆焊或司太立(Stellite)钴基硬质合金堆焊而成耐磨、耐高温、耐腐蚀、抗摩擦性能好，使用寿命长。
The sealing faces of both disc and seat ring are made by means of built-up welding with either iron-based alloy or Stellite Co-based carbide alloy upon different requirements, wearable, high temperature resisting, corrosion resisting, good friction resisting and long duration.

5、阀杆经调质及表面氮化处理，有良好抗摩擦性和抗腐蚀性，具有倒密封结构，保证阀门在运行时开启不经阀杆外漏，同时可更换阀杆填料。
The stem, after the modified and surface nitriding treatment, has a good friction and corrosion resistance and a back-seal structure to ensure the valve no leak outward from the stem when opened during running and able to replace the stem packing.

6、中大口径可采用内旁通结构并设置滚动轴承与推力轴承，开关灵活，启闭轻松。
The valves with a large or a middle apertures can use the internal by-pass structure and be set with a rolling bearing and a thrust bearing, resulting in flexible open-close.

7、电动截止阀配有SMC阀门电动装置，具有壳体小，重量轻，功能全，外形美等特点，并可与程控电脑配套使用，也可按用户要求选配电动装置。
The electric stop valve is fitted with SMC valve electric actuator, features a small casing, light weight, full functions and a nice outlook and can be used either with a program controlled computer or an electric actuator upon the user requirement.

产品主要参数 Main parameter of the products

基本型号 Serial models	闸阀 Gate valve		Z60Y、Z560Y、Z960Y			
	截止阀 Globe valve		J61Y、J561Y、J961Y、J65Y、J565Y、J965Y、			
	止回阀 Check valve		H64Y			
压力等级范围 Pressure grade range			Class1500～3500			
通径范围 Drift diameter range			2½"～22"			
驱动方式及适用范围 Driving manner & scope of application	闸阀 Gate valve	手轮驱动 Hand wheel driving	Class1500	Class2000～2500	Class3500	
			2½"～8"	2½"～6"	3"～4"	
		伞齿轮 Bevel gear	Class1500	Class2000～2500	Class3500	
			8"～22"	6"～16"	5"～12"	
		电 动 Electric driving	Class1500	Class2000～2500	Class3000	Class3500
			2½"～22"	2½"～16"	10"～22"	3"～18"
	截止阀 Globe valve	手轮驱动 Hand wheel driving	Class1500	Class2000～2500	Class3500	
			2½"～6"	2"～4"	2½"～3"	
		伞齿轮 Bevel gear	Class1500	Class2000～2500	Class3500	
			5"～8"	4"～12"	3"～6"	
		电 动 Electric driving	Class1500		Class2000～3500	
			3"～8"		2½"～6"	
	Y型截止阀 Y type globe valve	手轮驱动 Hand wheel driving	Class1500		Class2500	
			2½"～6"		2"～4"	
		伞齿轮 Bevel gear	Class1500	Class2000	Class2500	Class3500
			5"～8"	4"～12"	3"～14"	3"～6"
		电 动 Electric driving	Class1500	Class2500	Class2500	Class3500
			3"～8"	4"～12"	2"～14"	3"～6"
	止回阀 Check valve	—	Class1500～2000		Class2500	
			2½"～14"		3"～8"	

产品性能规范 Products performance specification

压力级 Pressure class	材 料 Material	强度试验(MPa) Shell test	密封试验与上密封试验(MPa) Seat test & back seat test	工作压力 (MPa) Working pressure	工作温度 (℃) Working temperature
1500Lb	WCB	39.20	28.60	26.00/14.50	-30～427
	WC1	36.70	26.85	24.40/17.10	-30～454
	WC6	39.50	8.20	26.40/6.30	-30～552
	WC9	39.60	10.10	26.40/6.55	-30～570
2000Lb	WCB	52.20	38.15	34.70/19	-30～427
	WC1	48.90	35.75	32.50/22.80	-30～454
	WC6	52.80	11.00	35.20/8.45	-30～552
	WC9	52.80	13.60	35.20/8.70	-30～570
2500Lb	WCB	65.20	47.75	43.40/24.10	-30～427
	WC1	61.20	44.75	40.70/28.50	-30～454
	WC6	65.90	13.80	43.90/10.60	-30～552
	WC9	65.90	16.92	43.90/10.60	-30～570
3000Lb	WCB	78.20*	57.30	52.10/28.90	-30～427
	WC1	73.40*	53.80	48.90/34.30	-30～454
	WC6	79.10*	16.50	48.90/13.00	-30～552
	WC9	79.10*	20.30	52.70/13.10	-30～570
3500Lb	WCB	91.20*	66.75	60.70/33.70	-30～427
	WC1	85.50*	62.70	57.00/40.00	-30～454
	WC6	92.30*	19.30	61.50/14.80	-30～552
	WC9	92.30*	23.65	61.50/15.25	-30～570

注：带"*"号的强度试验压力与用户商定为1.5倍设计压力。
Note: the shell test pressure with"*"mark can be negotiated with user and specified as 1.5 times design pressure.

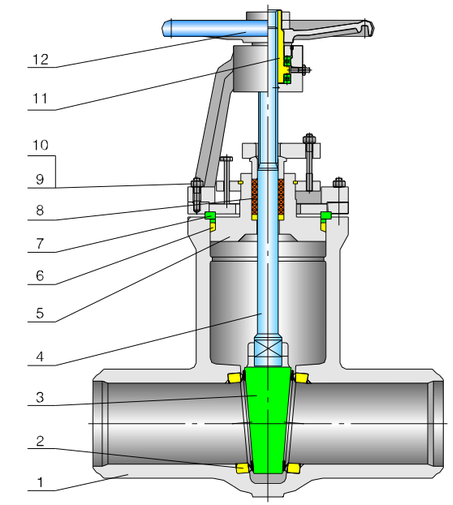

产品采用标准 Technical specification

设计标准 Design standard		JB/T 3593
结构长度 Structural length	对焊连接 Welded connection	JB/T 2788、GB/T 15188.1
压力与温度 Pressure and temperature		JB/T 3593
试验和检验 Test & inspection		JB/T 3593
焊接坡口 Weld the slope mouth		JB/T 3593、ASME 16.25

注：阀门连接法兰及焊接坡口可根据用户要求设计制造。
Note: valve connecting flange and welded groove can be designed and made upon the user requirements.

主要零件材料 Major parts material form

序号 No.	零件名称 Part name	材 质 Material
1	阀体 Body	WCB、WC1、WC6、WC9、C12
2	阀座 Seat	A105、A182-F11、F22、F5、F9
3	闸板 Disc	WCB、WC1、WC6、WC9、C12
4	阀杆 Stem	A182Gr.F6a、A182 -F22、A182-F11
5	阀盖 Bonnet	WCB、WC1、WC6、WC9、C12
6	密封圈 Sealing ring	柔性石墨 Graphite
7	四开环 Quarto ring	A182Gr.F6a、A182 -F22
8	填料 Packing	柔性石墨 Graphite
9	双头螺柱 Stud	A193-B7、A182 F22
10	螺母 Nut	A194-269、A182 F22
11	阀杆螺母 Valve stem nut	铜合金 Copper alloy
12	手轮 Handwheel	A47-32510

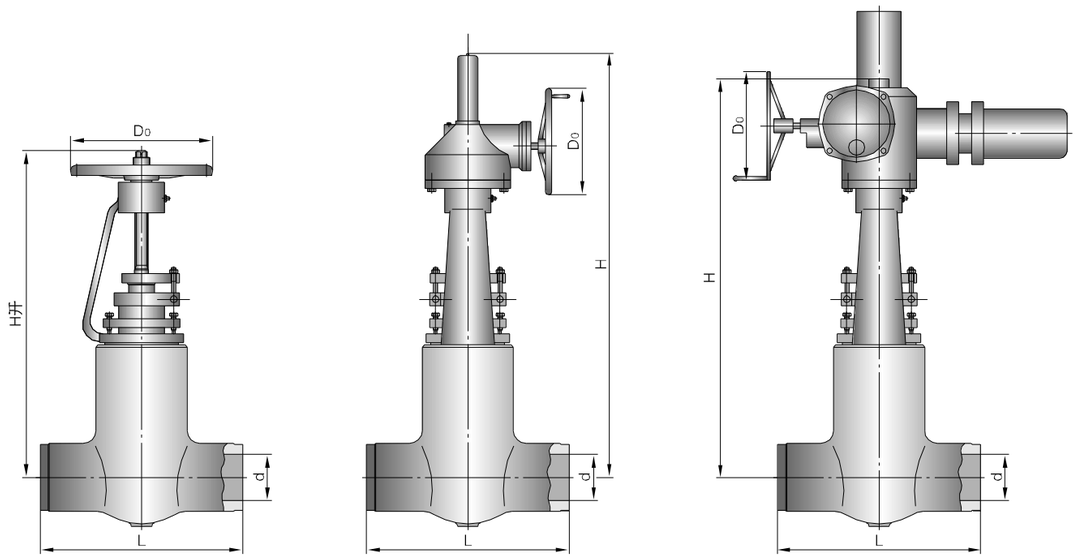

主要外形尺寸及重量 Main size of outside and weight

型号 Model：Z60Y-1500Lb、Z560Y-1500Lb、Z960Y-1500Lb

NPS (in)	L	d	手动 Hand-operated			齿动 Geared driving			齿动装置 Geared driving	电动 Electric driving device			电动装置 Electric driving device
			H	D0	重量(kg) Weight	H	D0	重量(kg) Weight		H	D0	重量(kg) Weight	
2 1/2	254	56	670	200	50	–	–	–	–	887	200	93	SMC-04
3	305	64	692	200	65	–	–	–	–	887	200	110	SMC-04
4	406	84	790	230	105	–	–	–	–	969	508	168	SMC-03
5	483	100	875	260	150	–	–	–	–	1073	508	223	SMC-03
6	559	126	1155	400	300	–	–	–	–	1270	305	395	SMC-0
8	711	158	1148	410	500	1261	460	418	BA-1	1325	305	555	SMC-0
10	864	210	–	–	–	1490	460	725	BA-1	1530	457	823	SMC-1
12	991	250	–	–	–	1765	610	1036	BA-2	1804	305	1280	SMC-1
14	1067	282	–	–	–	1952	760	1358	BA-3	2155	570	1725	SMC-2
16	1194	318	–	–	–	2051	760	1773	BA-3	2167	610	2429	SMC-3
18	1346	360	–	–	–	2155	760	2359	BA-3	2250	610	2454	SMC-3
20	1473	406	–	–	–	2451	760	3243	BA-3	2550	610	3334	SMC-3
22	1600	450	–	–	–	2679	760	4010	BA-3	2780	610	4409	SMC-3

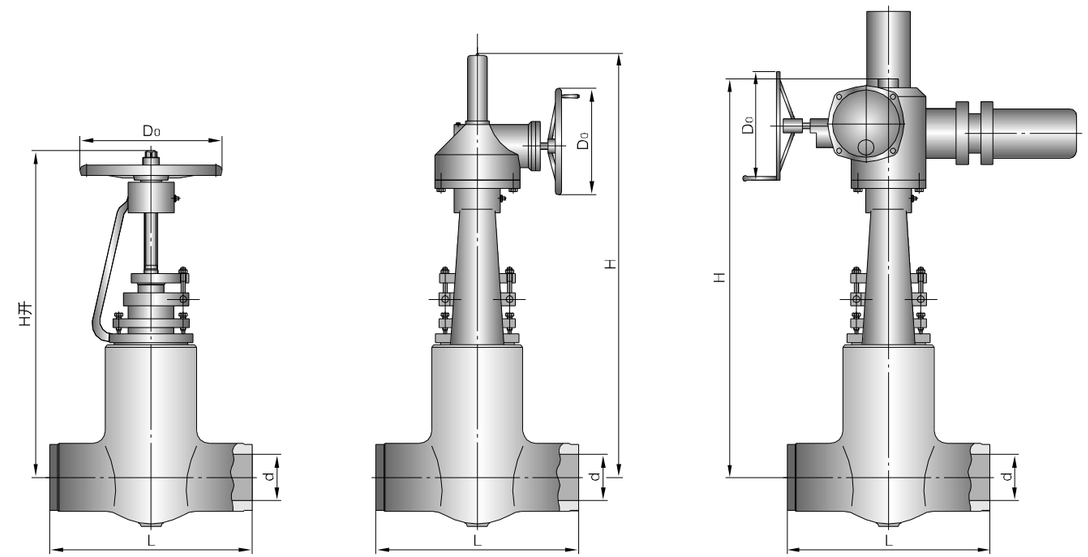

主要外形尺寸及重量 Main size of outside and weight

型号 Model：Z60Y-2000Lb、Z560Y-2000Lb、Z960Y-2000Lb

NPS (in)	L	d	手动 Hand-operated			齿动 Geared driving			齿动装置 Geared driving	电动 Electric driving device			电动装置 Electric driving device
			H	D0	重量(kg) Weight	H	D0	重量(kg) Weight		H	D0	重量(kg) Weight	
2 1/2	330	50	640	200	70	–	–	–	–	802	200	202	SMC-04
3	368	60	690	230	90	–	–	–	–	852	508	149	SMC-03
4	457	80	850	260	180	–	–	–	–	974	305	245	SMC-00
5	533	96	1117	360	210	–	–	–	–	1120	305	280	SMC-00
6	610	118	1300	410	438	–	–	–	–	1219	305	419	SMC-0
8	762	148	–	–	–	1210	310	602	BA-0	1349	305	626	SMC-0
10	914	180	–	–	–	1620	460	836	BA-1	1690	305	1020	SMC-1
12	1041	222	–	–	–	1710	610	1187	BA-2	1830	457	1320	SMC-2
14	1118	254	–	–	–	1763	610	1475	BA-2	1880	457	1810	SMC-2
16	1245	294	–	–	–	1925	610	1990	BA-2	2115	610	2270	SMC-3

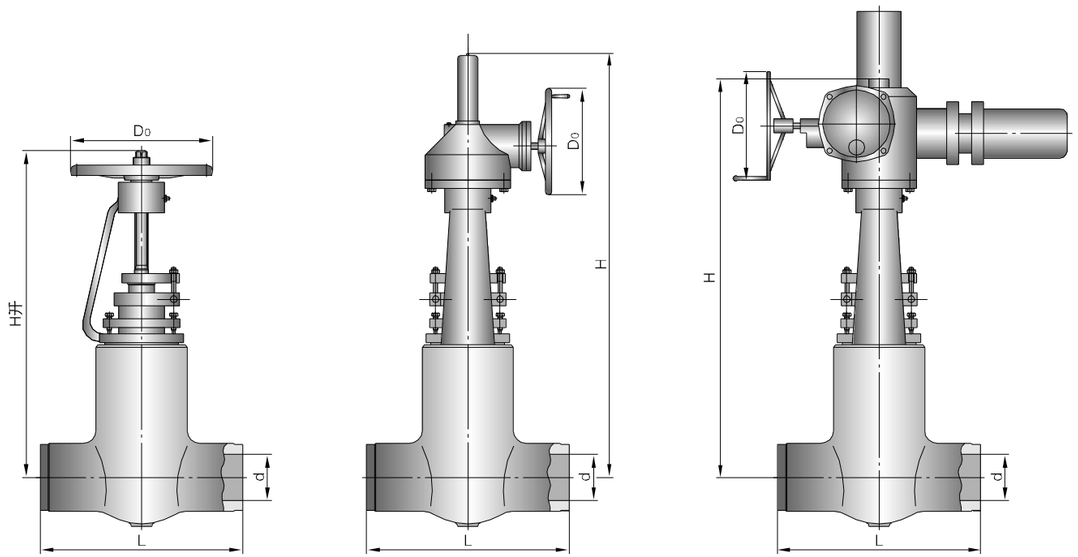

主要外形尺寸及重量 Main size of outside and weight

型号 Model：Z60Y-2500Lb、Z560Y-2500Lb、Z960Y-2500Lb

NPS (in)	L	d	手动 Hand-operated			齿动 Geared driving			齿动装置 Geared driving	电动 Electric driving device			电动装置 Electric driving device
			H	D0	重量(kg) Weight	H	D0	重量(kg) Weight		H	D0	重量(kg) Weight	
21/2	330	46	640	200	70	–	–	–	–	842	508	143	SMC-03
3	368	54	690	230	90	–	–	–	–	836	508	160	SMC-03
4	457	70	850	260	150	–	–	–	–	1094	508	335	SMC-03
5	533	86	1117	400	210	–	–	–	–	1170	305	324	SMC-00
6	610	104	1300	500	438	1116	310	340	BA-0	1266	305	467	SMC-00
8	762	130	–	–	–	1284	310	617	BA-0	1339	305	725	SMC-0
10	914	162	–	–	–	1504	460	1023	BA-1	1468	305	1152	SMC-1
12	1041	210	–	–	–	1725	610	1415	BA-2	1890	457	1520	SMC-2
14	1118	234	–	–	–	1793	610	1684	BA-2	1990	610	1869	SMC-3
16	1245	264	–	–	–	1935	610	2383	BA-2	2115	610	2826	SMC-3
22	1550	375	–	–	–	–	–	–	–	2886	760	7080	SMC-5

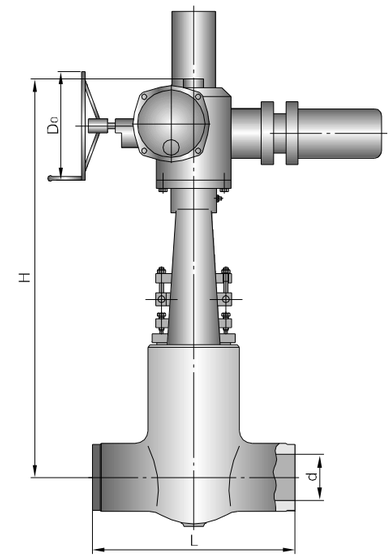

主要外形尺寸及重量 Main size of outside and weight

型号 Model：Z960Y-3000Lb

NPS (in)	电动 Electric driving device					电动装置 Electric driving device
	L	d	H	D0	重量(kg) Weight	
10	930	151	1812	305	1459	SMC-1
12	1060	186	1831	457	2180	SMC-2
14	1118	214	2130	610	2870	SMC-3
22	1550	338	2656	610	5591	SMC-4

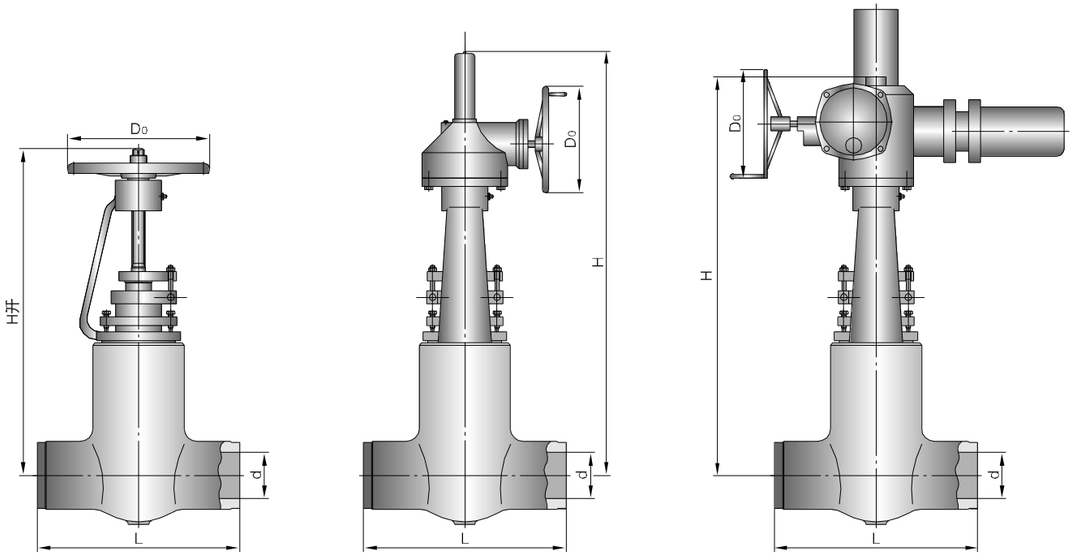

主要外形尺寸及重量 Main size of outside and weight

型号 Model：Z60Y-3500Lb、Z560Y-3500Lb、Z960Y-3500Lb

NPS (in)	L	d	手动 Hand-operated			齿动 Geared driving			齿动装置 Geared driving	电动 Electric driving device			电动装置 Electric driving device
			H	D0	重量(kg) Weight	H	D0	重量(kg) Weight		H	D0	重量(kg) Weight	
3	440	44	760	260	210	–	–	–	–	920	508	269	SMC-03
4	540	56	900	300	300	–	–	–	–	1066	305	398	SMC-00
5	616	74	–	–	–	1047	310	391	BA-0	1166	305	507	SMC-0
6	692	88	–	–	–	1108	310	493	BA-0	1227	305	605	SMC-0
8	846	116	–	–	–	1322	460	916	BA-1	1456	305	1088	SMC-1
10	1000	142	–	–	–	1548	610	1527	BA-2	1652	457	1733	SMC-2
12	1124	174	–	–	–	1689	610	2197	BA-2	1844	610	2708	SMC-3
14	1219	196	–	–	–	–	–	–	–	2125	610	3180	SMC-4
18	1499	252	–	–	–	–	–	–	–	2695	610	4560	SMC-4

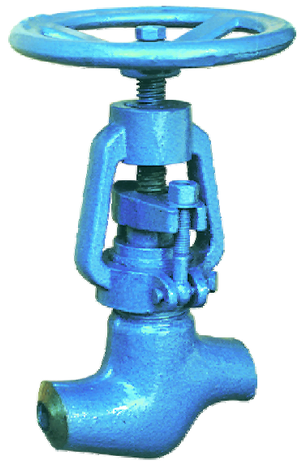

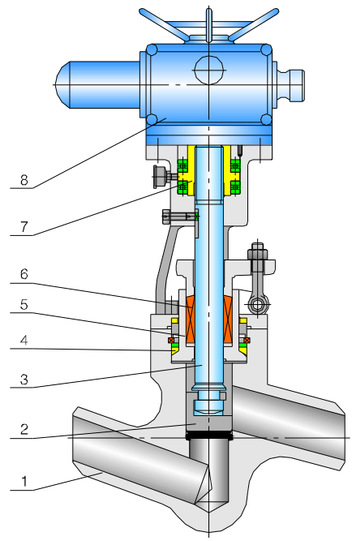

产品采用标准 Technical specification

设计标准 Design standard		JB/T 3593
结构长度 Structural length	对焊连接 Welded connection	JB/T 2788、GB/T 15188.1
压力与温度 Pressure and temperature		JB/T 3593
试验和检验 Test & inspection		JB/T 3593
焊接坡口 Weld the slope mouth		JB/T 3593、ASME 16.25

注：阀门连接法兰及焊接坡口可根据用户要求设计制造。
Note: valve connecting flange and welded groove can be designed and made upon the user requirements.

主要零件材料 Major parts material form

序号 No.	零件名称 Part name	材 质 Material
1	阀体 Body	WCB、WC1、WC6、WC9、C12
2	阀瓣 Disc	A105、A182-F11、F22、F5、F9
3	阀杆 Stem	A182-F6a、A182 -F22、A182-F11
4	密封圈 Sealing ring	柔性石墨 Graphite
5	阀盖 Bonnet	WCB、WC1、WC6、WC9、C12
6	填料 Packing	柔性石墨 Graphite
7	阀杆螺母 Valve stem nut	铜合金 Copper alloy
8	电动装置 Electronic device	组件 Package

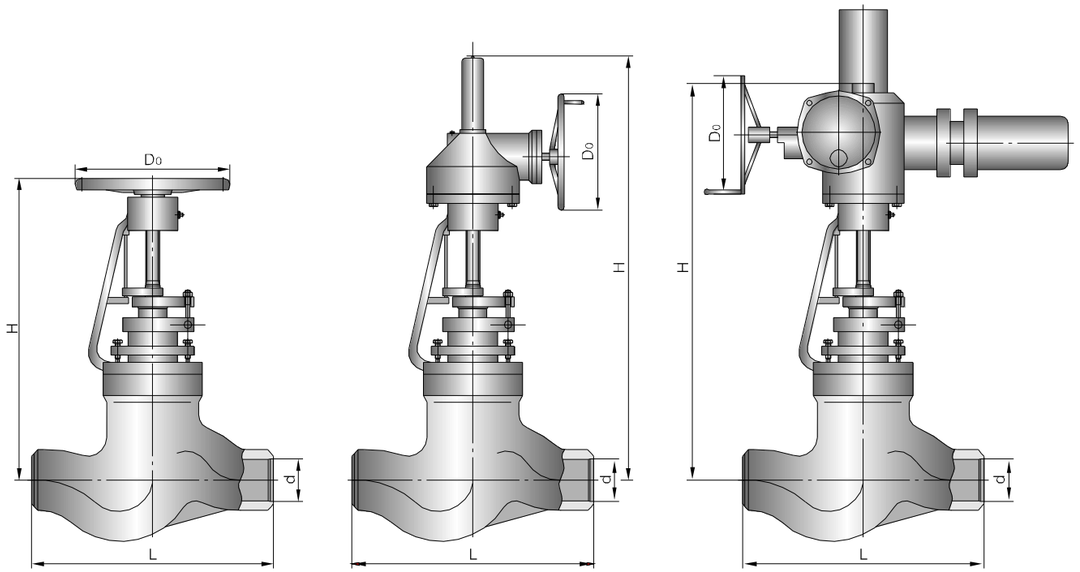

主要外形尺寸及重量 Main size of outside and weight

型号 Model：J61Y-1500Lb、J561Y-1500Lb、J961Y-1500Lb

NPS (in)	L	d	手动 Hand-operated			齿动 Geared driving			齿动装置 Geared driving	电动 Electric driving device			电动装置 Electric driving device
			H	D0	重量(kg) Weight	H	D0	重量(kg) Weight		H	D0	重量(kg) Weight	
3	390	64	848	510	150	–	–	–	–	1030	305	265	SMC-00
4	480	84	910	560	240	–	–	–	–	1070	305	384	SMC-0
5	580	100	1030	610	251	995	460	303	BA-1	1135	457	520	SMC-1
6	630	126	–	–	–	1360	460	680	BA-1	1681	305	804	SMC-1
8	770	158	–	–	–	1500	610	762	BA-2	1860	305	948	SMC-1

主要外形尺寸及重量 Main size of outside and weight

型号 Model：J61Y-2000Lb、J561Y-2000Lb、J961Y-2000Lb

NPS (in)	L	d	手动 Hand-operated			齿动 Geared driving			齿动装置 Geared driving	电动 Electric driving device			电动装置 Electric driving device
			H	D0	重量(kg) Weight	H	D0	重量(kg) Weight		H	D0	重量(kg) Weight	
2 1/2	420	50	815	510	160	–	–	–	–	975	305	340	SMC-0
3	470	60	895	560	200	–	–	–	–	1060	305	388	SMC-0
4	570	80	1024	700	280	1125	460	386	BA-1	1220	305	542	SMC-1
5	660	96	–	–	–	1370	610	460	BA-2	1425	457	646	SMC-2
6	760	118	–	–	–	1430	610	560	BA-2	1480	457	780	SMC-2

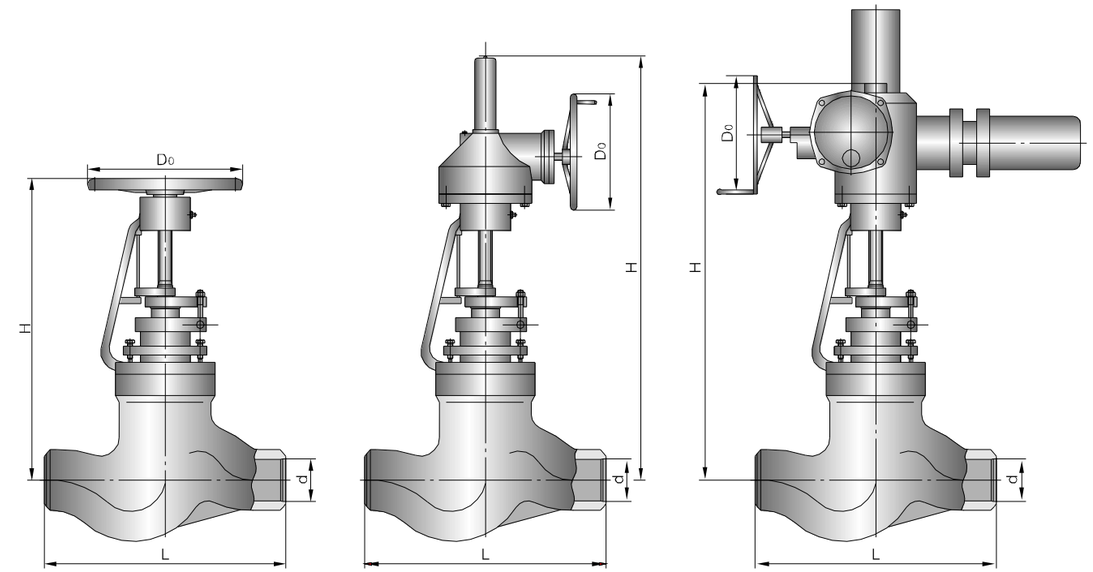

主要外形尺寸及重量 Main size of outside and weight

型号 Model：J61Y-2500Lb、J561Y-2500Lb、J961Y-2500Lb

NPS (in)	L	d	手动 Hand-operated			齿动 Geared driving			齿动装置 Geared driving	电动 Electric driving device			电动装置 Electric driving device
			H	D0	重量(kg) Weight	H	D0	重量(kg) Weight		H	D0	重量(kg) Weight	
2 1/2	420	46	857	510	250	–	–	–	–	975	305	390	SMC-0
3	470	54	940	560	290	–	–	–	–	1065	305	430	SMC-0
4	570	70	1085	700	325	1125	460	406	BA-1	1220	305	700	SMC-1
5	660	88	–	–	–	1370	610	505	BA-2	1425	457	772	SMC-2
6	760	104	–	–	–	1430	610	605	BA-2	1480	457	872	SMC-2

主要外形尺寸及重量 Main size of outside and weight

型号 Model：J61Y-3500Lb、J561Y-3500Lb、J961Y-3500Lb

NPS (in)	L	d	手动 Hand-operated			齿动 Geared driving			齿动装置 Geared driving	电动 Electric driving device			电动装置 Electric driving device
			H	D0	重量(kg) Weight	H	D0	重量(kg) Weight		H	D0	重量(kg) Weight	
2 1/2	480	38	890	460	235	–	–	–	–	945	305	342	SMC-00
3	640	48	1030	560	425	1055	310	458	BA-0	1150	305	565	SMC-0
4	762	60	–	–	–	1264	460	641	BA-1	1366	305	810	SMC-0
5	864	74	–	–	–	1435	460	903	BA-1	1530	457	920	SMC-2
6	965	88	–	–	–	1600	760	1050	BA-3	1725	610	1100	SMC-3

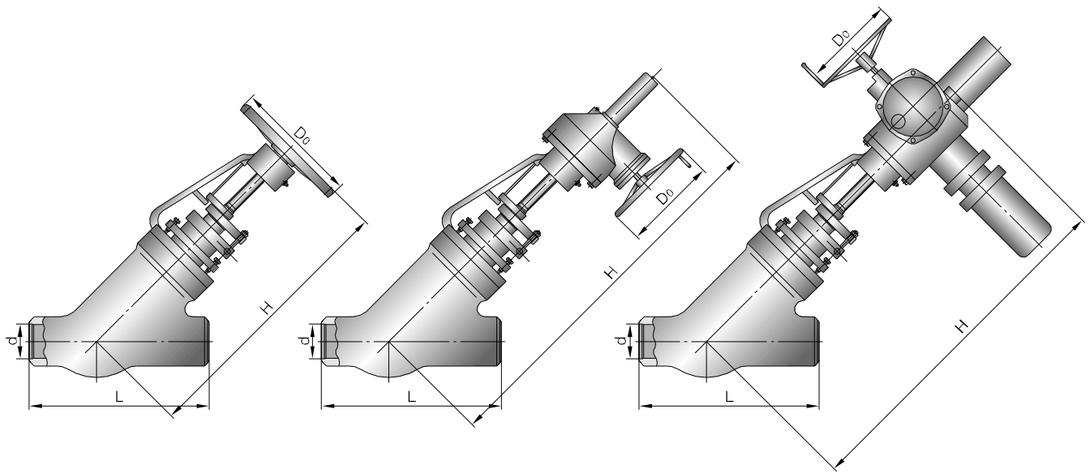

主要外形尺寸及重量 Main size of outside and weight

型号 Model：J65Y-1500Lb、J565Y-1500Lb、J965Y-1500Lb

NPS (in)	L	d	手动 Hand-operated			齿动 Geared driving			齿动装置 Geared driving	电动 Electric driving device			电动装置 Electric driving device
			H	D0	重量(kg) Weight	H	D0	重量(kg) Weight		H	D0	重量(kg) Weight	
2 1/2	330	56	670	360	45	–	–	–	–	–	–	–	–
3	368	64	750	460	70	–	–	–	–	990	305	200	SMC-0
4	457	84	830	510	110	–	–	–	–	990	305	310	SMC-1
5	533	100	910	560	129	1100	460	505	BA-1	1115	305	514	SMC-1
6	610	126	1100	610	180	1730	610	520	BA-2	1763	457	534	SMC-2
8	762	158	–	–	–	2010	610	820	BA-2	2026	457	950	SMC-2

主要外形尺寸及重量 Main size of outside and weight

型号 Model：J565Y-2000Lb、J965Y-2000Lb

NPS (in)	L	d	齿动 Geared driving			齿动装置 Geared driving	电动 Electric driving device			电动装置 Electric driving device
			H	D0	重量(kg) Weight		H	D0	重量(kg) Weight	
4	457	80	870	460	214	BA-1	990	305	327	SMC-1
5	533	96	995	460	303	BA-1	1115	305	408	SMC-1
6	610	118	1025	610	470	BA-2	1423	457	470	SMC-2
8	762	148	1505	610	980	BA-2	1615	457	1050	SMC-2
10	914	180	1825	760	1280	BA-3	2240	610	1582	SMC-4
12	1041	222	2300	610	2714	B-4-PA-2	2490	610	2340	SMC-4

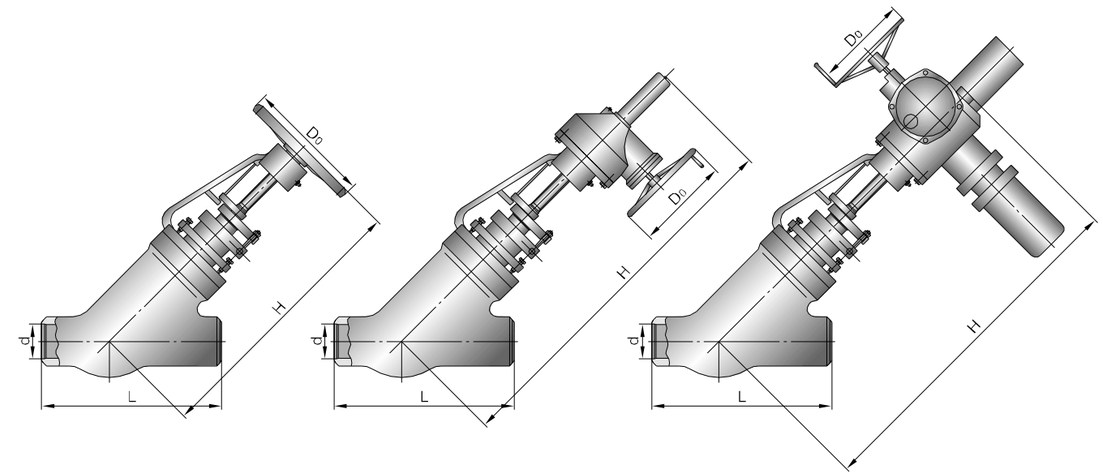

主要外形尺寸及重量 Main size of outside and weight

型号 Model：J65Y-2500Lb、J565Y-2500Lb、J965Y-2500Lb

NPS (in)	L	d	手动 Hand-operated			齿动 Geared driving			齿动装置 Geared driving	电动 Electric driving device			电动装置 Electric driving device
			H	D0	重量(kg) Weight	H	D0	重量(kg) Weight		H	D0	重量(kg) Weight	
2	310	38	550	300	42	–	–	–	–	810	305	130	SMC-00
2 1/2	340	46	670	360	72	–	–	–	–	895	305	160	SMC-00
3	390	54	750	460	81	750	310	121	BA-0	995	305	217	SMC-0
4	480	70	830	720	130	870	460	212	BA-1	990	305	337	SMC-1
5	580	86	–	–	–	995	460	312	BA-1	1115	305	432	SMC-1
6	630	104	–	–	–	1205	610	410	BA-2	1280	457	652	SMC-2
8	770	130	–	–	–	1565	610	1060	BA-2	1615	457	1122	SMC-2
10	930	162	–	–	–	1870	760	1380	BA-3	1930	610	1652	SMC-3
12	1060	210	–	–	–	2335	760	2824	B-4-PA-2	2240	610	2862	SMC-4
14	1160	234	–	–	–	2515	760	3624	B-4-PA-2	2420	610	3662	SMC-4

主要外形尺寸及重量 Main size of outside and weight

型号 Model：J565Y-3500Lb、J965Y-3500Lb

NPS (in)	L	d	齿动 Geared driving			齿动装置 Geared driving	电动 Electric driving device			电动装置 Electric driving device
			H	D0	重量(kg) Weight		H	D0	重量(kg) Weight	
3	470	48	817	310	172	BA-0	1005	305	272	SMC-0
4	550	60	930	310	293	BA-0	1133	305	387	SMC-0
5	660	74	1075	460	462	BA-1	1280	305	582	SMC-1
6	790	88	1220	460	727	BA-1	1320	305	847	SMC-1

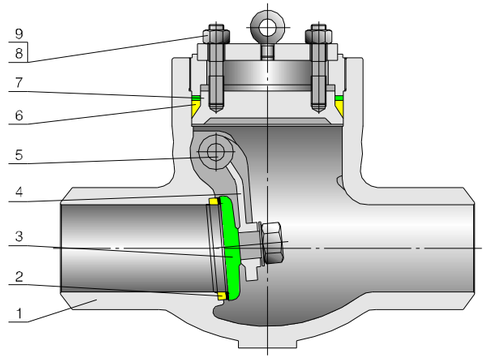

产品采用标准 Technical specification

设计标准 Design standard		JB/T 3595
结构长度 Structural length	对焊连接 Welded connection	JB/T 2766、GB/T 15188.1
压力与温度 Pressure and temperature		JB/T 3595
试验和检验 Test & inspection		JB/T 3595
焊接坡口 Weld the slope mouth		JB/T 3595、ASME 16.25

注：阀门连接法兰及焊接坡口可根据用户要求设计制造。
Note: valve connecting flange and welded groove can be designed and made upon the user requirements.

主要零件材料 Major parts material form

序号 No.	零件名称 Part name	材 质 Material
1	阀体 Body	WCB、WC1、WC6、WC9
2	阀座 Seat	A105、25、15CrMoa、12CrMoVA
3	阀瓣 Disc	A105、25、12CrMoVA
4	摇杆 Rocker	WCB、WC1、WC6、WC9
5	销轴 Sell the post	A105、25、15CrMoa、12CrMoVA
6	密封圈 Sealing ring	柔性石墨 Graphite
7	阀盖 Bonnet	WCB、WC1、WC6、WC9
8	双头螺柱	35CrMoA、25Cr2MoV
9	螺母 Nut	35CrMoA、25Cr2MoV

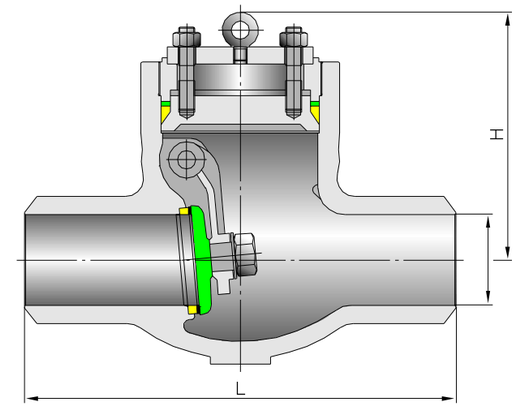

主要外形尺寸及重量 Main size of outside and weight

型号 Model：H64Y-1500Lb、H64Y-2000Lb、H64Y-2500Lb

NPS (in)	1500Lb				2000Lb				2500Lb			
	L	d	H	重量(kg) Weight	L	d	H	重量(kg) Weight	L	d	H	重量(kg) Weight
2½	254	55	282	45	330	50	240	40	–	–	–	–
3	305	64	274	50	368	60	305	60	368	54	297	44
4	406	84	350	80	457	80	315	95	457	70	385	110
5	483	100	425	115	533	96	409	170	533	86	403	168
6	559	126	400	180	610	118	465	186	610	104	455	192
8	711	158	490	270	762	147	528	415	762	130	557	456
10	864	200	540	430	914	180	613	658	914	162	615	730
12	991	250	650	630	1041	222	660	1200	1041	210	715	1120
14	1067	280	710	1400	1118	254	745	1638	1118	234	790	1495
16	–	–	–	–	–	–	–	–	1245	264	815	1950
18	–	–	–	–	–	–	–	–	1397	304	815	2400

产品性能规范 Products performance specification

型 号 Model	公称压力 (MPa) Pressure class	试验压力 Test Pressure (MPa)			工作压力 Working pressure (MPa)	工作温度 Working temperature	适用介质 Applicable medium
		强度试验 Shell test	密封试验 Seat test	上密封试验 Back seat test			
Z960Y-250 J961Y-250	250	37.5	27.5	27.5	14.5	427℃	水、蒸气 Water, steam
Z960Y-320 J961Y-320	320	48.0	35.2	35.2	12.5	427℃	
Z960Y-P_{54}100	P_{54}100	30.0	11.0	11.0	10.0	540℃	蒸气 Steam
Z960Y-P_{54}170V J961Y-P_{54}170V	P_{54}170	48.0	18.7	18.7	17.0	540℃	

产品主要参数 Main parameter of the products

基本型号 Serial models	闸阀 Gate valve		Z60Y、Z560Y、Z960Y				
	截止阀 Globe valve		J61Y、J561Y、J961Y、J65Y、J565Y、J965Y、				
	止回阀 Check valve		H64Y				
压力等级范围 Pressure grade range			25.0MPa、32.0MPa、P_{54}100、P_{54}170				
通径范围 Drift diameter range			DN10～350mm				
驱动方式及适用范围 Driving manner & scope of application	闸阀 Gate valve	电 动 Electric driving	25.0MPa	32.0MPa	P_{54}100	P_{54}170	
			DN100～300mm	DN100～250mm	DN175～250mm	DN175～350mm	
	截止阀 Globe valve	手轮驱动、电动 Hand wheel driving Electric driving	25.0MPa、32.0MPa、P_{54}100、P_{54}140、P_{54}170				
			DN10～100mm				

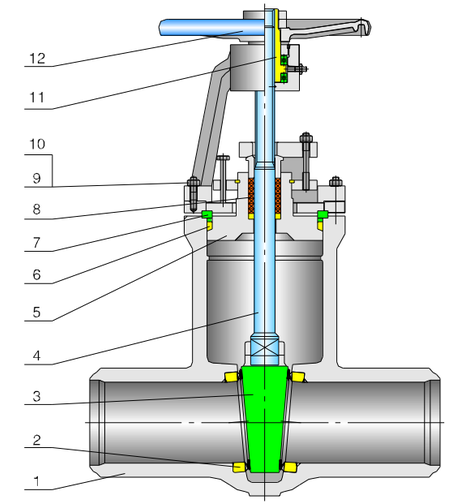

产品采用标准 Technical specification

设计标准 Design standard		JB/T 3595
结构长度 Structural length	对焊连接 Welded connection	JB/T 2766、GB/T 15188.1
压力与温度 Pressure and temperature		JB/T 3595、JB/T 74
试验和检验 Test & inspection		JB/T 3595
焊接坡口 Weld the slope mouth		JB/T 3595

注：阀门连接法兰及焊接坡口可根据用户要求设计制造。
Note: valve connecting flange and welded groove can be designed and made upon the user requirements.

主要零件材料 Major parts material form

序号 No.	零件名称 Part name	材 质 Material
1	阀体 Body	WCB、WC1、WC6、WC9、C12A
2	阀座 Seat	25、15CrMoa、12CrMoVA
3	闸板 Disc	WCB、WC1、WC6、WC9、C12A
4	阀杆 Stem	1Cr17Ni12、2Cr13、20Cr1MoV、25Cr2Mo1V
5	阀盖 Bonnet	WCB、WC1、WC6、WC9、C12A
6	密封圈 Sealing ring	柔性石墨 Graphite
7	四开环 Quarto ring	1Cr13、2Cr13
8	填料 Packing	柔性石墨 Graphite
9	双头螺柱 Stud	35CrMoA、25Cr2MoV
10	螺母 Nut	35CrMoA、25Cr2MoV
11	阀杆螺母 Valve stem nut	铜合金 Copper alloy
12	手轮 Handwheel	QT400-17

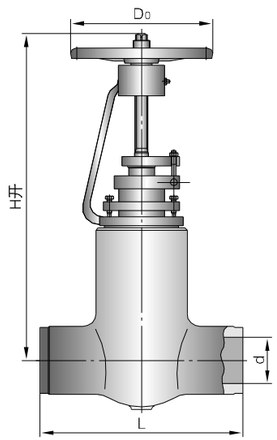

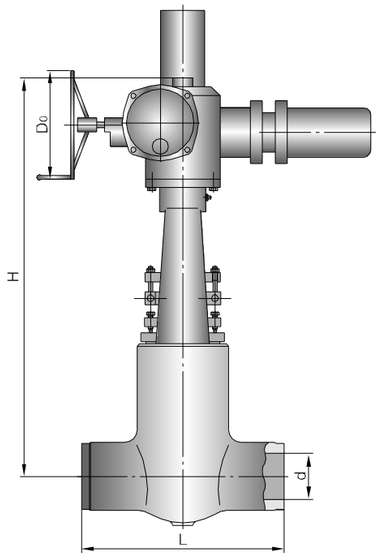

主要外形尺寸及重量 Main size of outside and weight

型号 Model：Z960Y-250

DN (mm)	尺寸 Dimensions(mm)				重量(kg) Weight	电动装置 Electric driving device
	L	d	H	D0		
100	483	106	1194	508	223	SMC-03
125	559	126	1270	305	395	SMC-0
175	711	158	1325	305	555	SMC-0
225	864	210	1530	457	850	SMC-1
250	991	250	1804	305	1280	SMC-1
275	1067	282	2155	457	1725	SMC-2
300	1194	318	2167	610	2429	SMC-3

型号 Model：Z960Y-320

DN (mm)	尺寸 Dimensions(mm)				重量(kg) Weight	电动装置 Electric driving device
	L	d	H	D0		
100	533	96	1120	305	280	SMC-00
125	610	118	1219	305	419	SMC-0
175	762	148	1349	305	626	SMC-0
225	914	180	1690	305	1020	SMC-1
250	1041	222	1830	457	1320	SMC-2

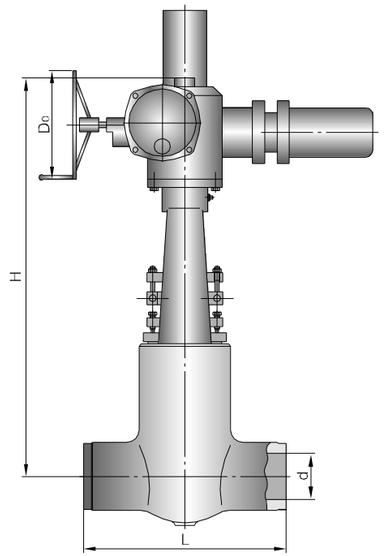

主要外形尺寸及重量 Main size of outside and weight

型号 Model：Z960Y-P54100

DN (mm)	尺寸 Dimensions(mm)				重量(kg) Weight	电动装置 Electric driving device
	L	d	H	D0		
100	533	96	1120	305	280	SMC-00
125	610	118	1219	305	419	SMC-0
175	762	148	1349	305	626	SMC-0
225	914	180	1690	305	1020	SMC-1
250	1041	222	1830	457	1320	SMC-2

型号 Model：Z960Y-P54140

DN (mm)	尺寸 Dimensions(mm)				重量(kg) Weight	电动装置 Electric driving device
	L	d	H	D0		
175	762	130	1339	305	725	SMC-0
225	914	162	1468	305	1152	SMC-1
250	1041	210	1890	457	1520	SMC-2

型号 Model：Z960Y-P54170

DN (mm)	尺寸 Dimensions(mm)				重量(kg) Weight	电动装置 Electric driving device
	L	d	H	D0		
175	930	151	1812	305	1459	SMC-1
225	1060	186	1831	457	2180	SMC-2
250	1118	214	2130	457	2870	SMC-2
350	1550	338	2456	610	5591	SMC-4

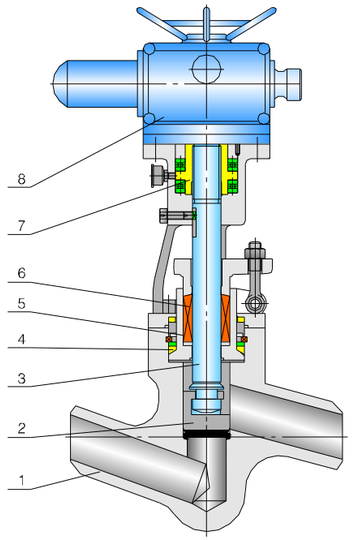

产品采用标准 Technical specification

设计标准 Design standard		JB/T 3595
结构长度 Structural length	对焊连接 Welded connection	JB/T 2766、GB/T15188.1
压力与温度 Pressure and temperature		JB/T 3595
试验和检验 Test & inspection		JB/T 3595
焊接坡口 Weld the slope mouth		JB/T 3595

注：阀门连接法兰及焊接坡口可根据用户要求设计制造。
Note: valve connecting flange and welded groove can be designed and made upon the user requirements.

主要零件材料 Major parts material form

序号 No.	零件名称 Part name	材 质 Material
1	阀体 Body	WCB、WC1、WC6、WC9、C12
2	阀瓣 Disc	25、12Cr1MoVA、1Cr13
3	阀杆 Stem	1Cr17Ni12、2Cr13、20Cr1Mo1VA、25Cr2MoV
4	密封圈 Sealing ring	柔性石墨 Graphite
5	阀盖 Bonnet	WCB、WC1、WC6、WC9、C12
6	填料 Packing	柔性石墨 Graphite
7	阀杆螺母 Valve stem nut	铜合金 Copper alloy
8	电动装置 Electronic device	组件 Package

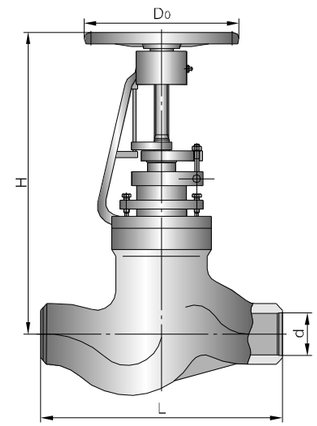

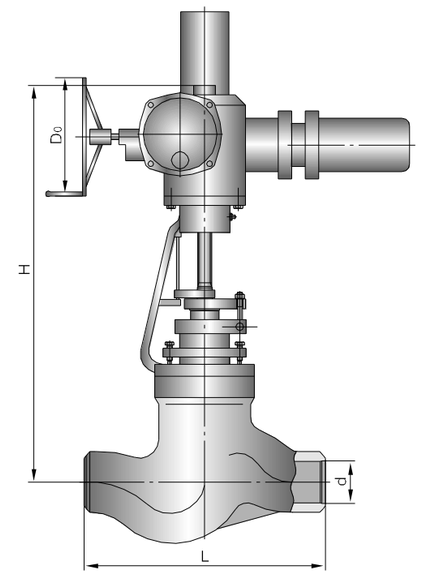

主要外形尺寸及重量 Main size of outside and weight

型号 Model：J61Y-250、J961Y-250

DN (mm)	L	d	手动 Hand-operated			电动 Electric driving device			电动装置 Electric driving device
			H	D0	重量(kg) Weight	H	D0	重量(kg) Weight	
10	120	10	210	160	8	-	-	-	-
20	170	19	272	180	10	600	250	72.5	DZW10
25	1780	22	308	240	11.2	590	250	73	DZW10
32	170	26	308	240	11.8	600	250	73.5	DZW10
40	250	36	493	320	36.3	-	-	-	-
50	250	42	493	320	36.3	736	250	85	DZW30
65	340	56	775	460	120	1060	450	188	DZW45
80	390	64	848	510	150	1280	560	275	DZW90
100	480	84	910	560	240	1290	560	310	DZW90

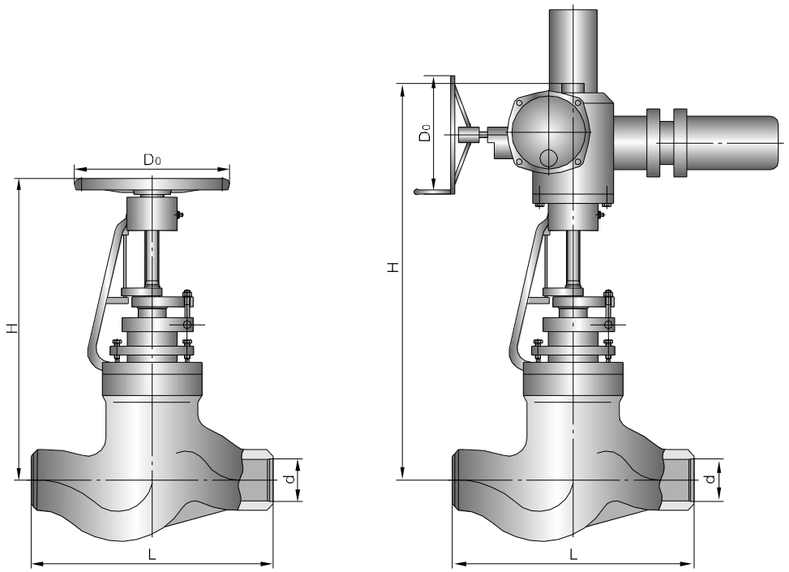

主要外形尺寸及重量 Main size of outside and weight

型号 Model：J61Y-320、J961Y-320

DN (mm)	L	d	手动 Hand-operated			电动 Electric driving device			电动装置 Electric driving device
			H	D0	重量(kg) Weight	H	D0	重量(kg) Weight	
10	120	10	210	160	8	–	–	–	–
20	170	19	272	180	10	600	250	72.5	DZW10
25	170	22	308	240	11.2	590	250	73	DZW10
32	170	26	308	240	11.8	600	250	73.5	DZW10
40	250	36	493	320	36.3	–	–	–	–
50	250	42	493	320	36.3	736	250	85	DZW30
65	470	60	895	560	200	1140	560	190	DZW90
80	570	80	4085	700	280	1350	560	460	DZW120
100	660	96	1045	700	340	1500	600	610	DZW180

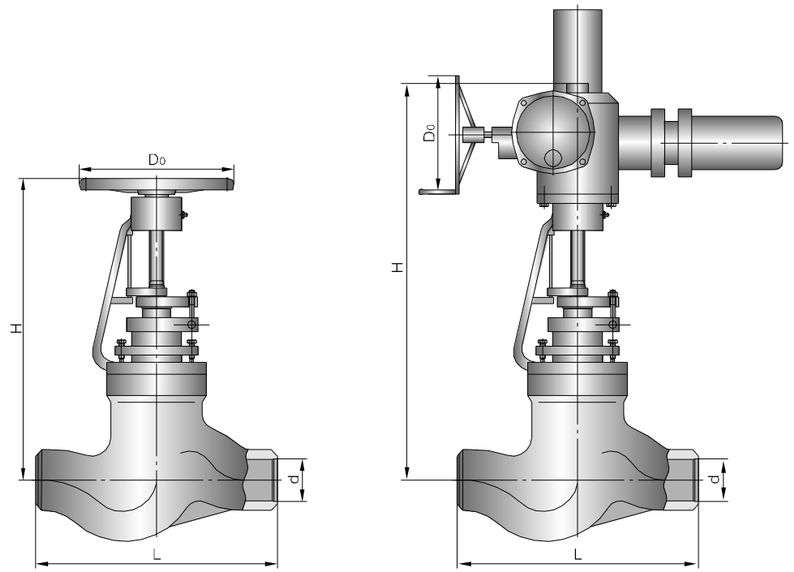

主要外形尺寸及重量 Main size of outside and weight

型号 Model：J61Y-P54170V、J961Y-P54170V

DN (mm)	L	d	手动 Hand-operated			电动 Electric driving device			电动装置 Electric driving device
			H	D0	重量(kg) Weight	H	D0	重量(kg) Weight	
10	120	10	210	160	8	–	–	–	–
20	170	19	272	180	10	600	250	72.5	DZW10
25	170	22	308	240	11.2	590	250	73	DZW10
32	170	26	308	240	11.8	600	250	73.5	DZW10
40	250	36	493	320	36.3	–	–	–	–
50	250	42	493	320	36.3	736	250	85	DZW30
65	762	60	895	610	500	1543	560	785	DZW90
80	864	80	1315	900	750	1790	560	1089	DZW120
100	965	88	1475	900	1000	1891	600	1451	DZW180

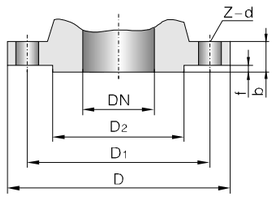

PN1.0～2.5MPa(RF)

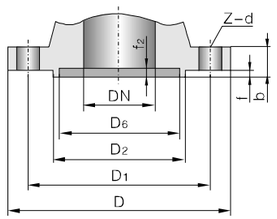

PN4.0～6.4MPa(FM)

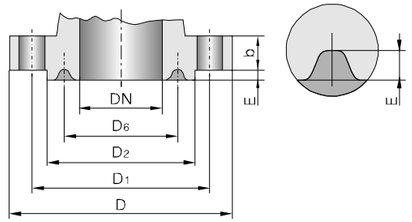

PN10.0～42.0MPa(RTJ)

法兰连接尺寸 Connection dimension JB/T79.1-94 (RF)

公称压力 Nominal pressure PN(MPa)	DN (mm)	尺寸 Dimensions (mm)					
		D	D1	D2	b	f	z-d
1.0	25	115	85	65	16	2	4-14
	32	135	100	78	18	2	4-18
	40	145	110	85	18	3	4-18
	50	160	125	100	20	3	4-18
	65	180	145	120	20	3	4-18
	80	195	160	135	22	3	4-18
	100	215	180	155	22	3	8-18
	125	245	210	185	24	3	8-18
	150	280	240	210	24	3	8-23
	200	335	295	265	26	3	8-23
	250	390	350	320	28	3	12-23
	300	440	400	368	28	4	12-23
	350	500	460	428	30	4	16-23
	400	565	515	482	32	4	16-25
	450	615	565	532	32	4	20-25
	500	670	620	585	34	4	20-25
	600	780	725	685	36	5	20-30
	700	895	840	800	40	5	24-30
	800	1010	950	905	44	5	24-34
	900	1110	1050	1005	46	5	28-34
	1000	1220	1160	1115	50	5	28-34
	1200	1450	1380	1325	56	5	32-41

法兰连接尺寸 Connection dimension JB/T79.1-94 (RF)

公称压力 Nominal pressure PN(MPa)	DN (mm)	尺寸 Dimensions (mm)					
		D	D1	D2	b	f	z-d
1.6	15	95	65	45	14	2	4-14
	20	105	75	55	14	2	4-14
	25	115	85	65	14	2	4-14
	32	135	100	78	16	2	4-18
	40	145	110	85	16	3	4-18
	50	160	125	100	16	3	4-18
	65	180	145	120	18	3	4-18
	80	195	160	135	20	3	8-18
	100	215	180	155	20	3	8-18
	125	245	210	185	22	3	8-18
	150	280	240	210	24	3	8-23
	200	335	295	265	26	3	12-23
	250	405	355	320	30	3	12-25
	300	460	410	375	30	4	12-25
	350	520	470	435	34	4	16-25
	400	580	525	485	36	4	16-30
	450	640	585	545	40	4	20-30
	500	705	650	608	44	4	20-34
	600	840	770	718	48	5	20-41
	700	910	840	788	50	5	24-41
	800	1020	950	898	52	5	24-41
	900	1120	1050	998	54	5	28-41
	1000	1255	1170	1110	56	5	28-48
	1200	1485	1390	1325	58	5	32-54
2.5	10	90	60	40	16	2	4-14
	15	95	65	45	16	2	4-14
	20	105	75	55	16	2	4-14
	25	115	85	65	16	2	4-14
	32	135	100	78	18	2	4-18
	40	145	110	85	18	3	4-18
	50	160	125	100	20	3	4-18
	65	180	145	120	22	3	8-18
	80	195	160	135	22	3	8-18
	100	230	190	160	24	3	8-23
	125	270	220	188	28	3	8-25
	150	300	250	218	30	3	8-25
	200	360	310	278	34	3	12-25
	250	425	370	332	36	3	12-30
	300	485	430	390	40	4	16-30
	350	550	490	448	44	4	16-34
	400	610	550	505	48	4	16-34
	450	660	600	555	50	4	20-34
	500	730	660	610	52	4	20-41
	600	840	770	718	56	5	20-41
	700	955	875	815	60	5	24-48
	800	1070	990	930	64	5	24-48
	900	1180	1090	1025	66	5	28-54
	1000	1305	1210	1140	68	5	28-58
	1200	1525	1420	1350	72	5	32-58

法兰连接尺寸 Connection dimension JB/T79.2-94 (FM)

公称压力 Nominal pressure PN(MPa)	DN (mm)	尺寸 Dimensions (mm)							
		D	D_1	D_2	D_6	b	f	f_2	z-d
4.0	15	95	65	45	40	16	2	4	4-14
	20	105	75	55	51	16	2	4	4-14
	25	115	85	65	58	16	2	4	4-14
	32	135	100	78	66	18	2	4	4-18
	40	145	110	85	76	18	3	4	4-18
	50	160	125	100	88	20	3	4	4-18
	65	180	145	120	110	22	3	4	8-18
	80	195	160	135	121	22	3	4	8-18
	100	230	190	160	150	24	3	4.5	8-23
	125	270	220	188	176	28	3	4.5	8-25
	150	300	250	218	204	30	3	4.5	8-25
	200	375	320	282	260	38	3	4.5	12-30
	250	445	385	345	313	42	3	4.5	12-34
	300	510	450	408	364	46	4	4.5	16-34
	350	570	510	465	422	52	4	5	16-34
	400	655	585	535	474	58	4	5	16-41
	450	680	610	560	524	60	4	5	20-41
	500	755	670	612	576	62	4	5	20-48
	600	890	795	730	678	62	5	6	20-54
	700	995	900	835	768	68	5	6	24-54
	800	1135	1030	960	876	76	5	6	24-58
6.4	15	105	75	55	40	18	2	4	4-14
	20	125	90	68	51	20	2	4	4-18
	25	135	100	78	58	22	2	4	4-18
	32	150	110	82	66	24	2	4	4-23
	40	165	125	95	76	24	3	4	4-23
	50	175	135	105	88	26	3	4	4-23
	65	200	160	130	110	28	3	4	8-23
	80	210	170	140	121	30	3	4	8-23
	100	250	200	168	150	32	3	4.5	8-25
	125	295	240	202	176	36	3	4.5	8-30
	150	340	280	240	204	38	3	4.5	8-34
	200	405	345	300	260	44	3	4.5	12-34
	250	470	400	352	313	48	3	4.5	12-41
	300	530	460	412	364	54	4	4.5	16-41
	350	595	525	475	422	60	4	5	16-41
	400	670	585	525	474	66	4	5	16-48
	450	715	630	570	524	70	4	5	20-48
	500	800	705	640	576	70	4	5	20-54
	600	930	820	750	678	76	5	6	20-58
	700	1045	935	865	768	84	5	6	24-58

法兰连接尺寸 Connection dimension JB/T79.2-94 (RTJ)

公称压力 Nominal pressure PN(MPa)	DN (mm)	尺寸 Dimensions (mm)							
		D	D_1	D_2	D_6	b	f	f_2	z-d
10.0	15	105	75	55	35	20	2	4	4-14
	20	125	90	68	45	22	2	4	4-18
	25	135	100	78	50	24	2	4	4-18
	32	150	110	82	65	24	2	4	4-23
	40	165	125	95	75	26	3	4	4-23
	50	195	145	112	85	28	3	4	4-25
	65	220	170	138	110	32	3	4	8-25
	80	230	180	148	115	34	3	4	8-25
	100	265	210	172	145	38	3	4.5	8-30
	125	310	250	210	175	42	3	4.5	8-34
	150	350	290	250	205	46	3	4.5	12-34
	200	430	360	312	265	54	3	4.5	12-41
	250	500	430	382	320	60	3	4.5	12-41
	300	585	500	442	375	70	4	4.5	16-48
	350	655	560	498	420	76	4	5	16-54
	400	715	620	558	480	80	4	5	16-54
	450	770	675	615	540	84	4	5	16-58
	500	870	760	690	590	90	5	5	20-58
16.0	15	110	75	52	35	24	2	4	4-18
	20	130	90	62	45	26	2	4	4-23
	25	140	100	72	50	28	2	4	4-23
	32	165	115	85	65	30	2	4	4-25
	40	175	125	92	75	32	3	4	4-27
	50	215	165	132	95	36	3	4	8-25
	65	245	190	152	110	44	3	4	8-30
	80	260	205	168	130	46	3	4	8-30
	100	300	240	200	160	48	3	4.5	8-34
	125	355	285	238	190	60	3	4.5	8-41
	150	390	318	270	205	66	3	4.5	12-41
	200	480	400	345	275	78	3	4.5	12-48
	250	580	485	425	330	88	3	4.5	12-54
	300	665	570	510	380	100	4	4.5	16-54
20.0	15	120	82	28	40	26	2	5	4-23
	20	130	90	35	45	28	2	5	4-23
	25	150	102	42	50	30	2	5	4-25
	32	160	115	50	65	32	2	5	4-25
	40	170	124	56	75	34	3	5	4-27
	50	210	160	70	95	40	3	5	8-25
	65	260	203	97	110	48	3	5	8-30
	80	290	230	116	160	54	3	5	8-34
	100	360	292	138	190	66	3	6	8-41
	125	385	318	170	205	78	3	6	12-41
	150	440	360	190	240	82	3	6	12-48
	200	535	440	245	305	92	3	6	12-54
	250	670	572	319	380	110	3	6	12-58

法兰连接尺寸 Connection dimension GB9113.4-2000 (RTJ)

公称压力 Nominal pressure PN(MPa)	DN (mm)	尺寸 Dimensions (mm)					
		D	D_1	D_6	b	z-d	槽号(R) Number of the trough
26.0	15	120	82.5	39.67	22.5	4-22	12
	20	130	89	44.45	25.5	4-22	14
	25	150	101.5	50.8	29	4-26	16
	32	160	111	60.32	29	4-26	18
	40	180	124	68.28	32	4-29.5	20
	50	215	165	95.25	38.5	8-26	24
	65	245	190.5	107.95	41.5	8-29.5	27
	80	265	203	136.52	48	8-32.5	35
	100	310	241.5	161.92	54	8-35.5	39
	125	375	292	193.68	73.5	8-42	44
	150	395	317.5	211.12	83	12-39	46
	200	485	393.5	269.88	92	12-45	50
	250	585	482.5	323.85	108	12-51	54
	300	675	571.5	381	124	16-55	58
	350	750	635	419.1	133.5	16-60	63
	400	825	705	469.9	146.5	16-68	67
	450	915	774.5	533.4	162	16-74	71
	500	985	832	584.2	178	16-80	75
	600	1170	990.5	692.15	203.5	16-94	79
42.0	15	135	89	42.88	30.5	4-22	13
	20	140	95	50.8	32	4-22	16
	25	160	108	60.32	35	4-26	18
	32	185	130	72.24	38.5	4-29.5	21
	40	205	146	82.55	44.5	4-32.5	23
	50	235	171.5	101.6	51	8-29.5	26
	65	265	197	111.12	57.5	8-32.5	28
	80	305	228.5	127	67	8-35.5	32
	100	355	273	157.18	76.5	8-42	38
	125	420	324	190.5	92.5	8-48	42
	150	485	368.5	228.6	108	8-55	47
	200	550	438	279.4	127	12-55	51
	250	675	539.5	342.9	165.5	12-68	55
	300	760	619	406.4	184.5	12-74	60

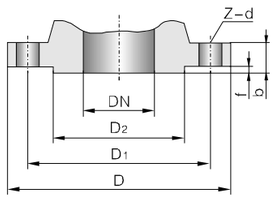

150Lb～300Lb(RF)

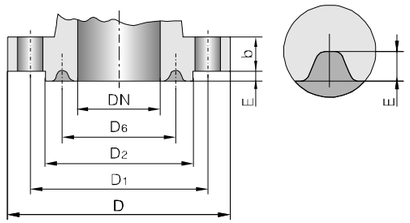

400Lb～2500Lb(RTJ)

法兰连接尺寸 Connection dimension ANSI B16.5a (RF)

公称压力 Nominal pressure PN(MPa)	DN		尺寸 Dimensions (mm)					
	mm	in	D	D_1	D_2	b	螺栓数量(Z) Quantity of the bolt	螺栓孔径(Φ) Aperture of the bolt
150Lb	15	1/2	89	60.5	35	11.5	4	16
	20	3/4	98	70	43	12.5	4	16
	25	1	108	79.5	51	14	4	16
	32	1 1/4	117	89	64	16	4	16
	40	1 1/2	127	98.5	73	17.5	4	16
	50	2	152	120.5	92	19	4	19
	65	2 1/2	178	139.5	105	22.5	4	19
	80	3	190	152.5	127	24	4	19
	100	4	229	190.5	157	24	8	19
	125	5	254	216	186	24	8	22
	150	6	279	241.5	216	26	8	22
	200	8	343	298.5	270	29	8	22
	250	10	406	362	324	31	12	25
	300	12	483	432	381	32	12	25
	350	14	533	476	413	35	12	29
	400	16	597	540	470	37	16	29
	450	18	635	578	533	40	16	32
	500	20	699	635	584	43	20	32
	600	24	813	749.5	692	48	20	35

法兰连接尺寸 Connection dimension ANSI B16.5a (RF)

公称压力 Nominal pressure PN(MPa)	DN		尺寸 Dimensions (mm)					
	mm	in	D	D_1	D_2	b	螺栓数量(Z) Quantity of the bolt	螺栓孔径(Φ) Aperture of the bolt
300Lb	15	1/2	95	66.5	35	15	4	16
	20	3/4	117	82.5	43	16	4	19
	25	1	124	89	51	18	4	19
	32	1 1/4	133	98.5	64	19	4	19
	40	1 1/2	156	114.5	73	21	4	22
	50	2	165	127	92	23	8	19
	65	2 1/2	190	149	105	26	8	22
	80	3	210	168.5	127	29	8	22
	100	4	254	200	157	32	8	22
	125	5	279	235	186	35	8	22
	150	6	318	270	216	37	12	22
	200	8	381	330	270	42	12	25
	250	10	445	387.5	324	48	16	29
	300	12	521	451	381	51	16	32
	350	14	584	514.5	413	54	20	32
	400	16	648	571.5	470	58	20	35
	450	18	711	628.5	533	61	24	35
	500	20	775	686	584	64	24	35
	600	24	914	813	692	70	24	41

法兰连接尺寸 Connection dimension ANSI B16.5a (RTJ)

公称压力 Nominal pressure PN(MPa)	DN		尺寸 Dimensions (mm)						
	mm	in	D	D_1	D_2	D_6	b	螺栓数量(Z) Quantity of the bolt	螺栓孔径(Φ) Aperture of the bolt
400Lb	15	1/2	95	66.5	50.8	34.1	14.5	4	16
	20	3/4	118	82.5	63.5	42.9	16	4	19
	25	1	124	89	70	50.8	17.5	4	19
	32	1 1/4	133	98.5	79	60.3	21	4	19
	40	1 1/2	156	114.5	90	68.3	22.5	4	22
	50	2	165	127	108	82.6	25.5	8	19
	65	2 1/2	190	149	127	101.6	29	8	22
	80	3	210	168	146	123.8	32	8	22
	100	4	254	200	175	149.2	35	8	26
	125	5	279	234.9	210	181	38.5	8	26
	150	6	318	269.9	241	211.1	41.5	12	26
	200	8	381	330.2	302	270	48	12	29
	250	10	445	387.3	356	323.9	54	16	32
	300	12	520	450.8	413	381	57.5	16	35
	350	14	585	514.3	457	419.1	60.5	20	35
	400	16	650	571.5	508	469.9	63.5	20	39
	450	18	710	628	574.5	533.4	67	24	39
	500	20	775	685.8	635	584.2	70	24	42
	600	24	915	812.8	749	692.2	76.5	24	48

法兰连接尺寸 Connection dimension ANSI B16.5a (RTJ)

公称压力 Nominal pressure PN(MPa)	DN		尺寸 Dimensions (mm)						
	mm	in	D	D_1	D_2	D_6	b	螺栓数量(Z) Quantity of the bolt	螺栓孔径(Φ) Aperture of the bolt
600Lb	15	1/2	95	66.5	50.8	34.1	15	4	16
	20	3/4	118	82.5	63.5	42.9	16	4	19
	25	1	124	89	70	50.8	18	4	19
	32	1 1/4	133	98.5	79	60.3	21	4	19
	40	1 1/2	156	114.5	90	68.3	23	4	22
	50	2	165	127	108	82.6	26	8	19
	65	2 1/2	190	149	127	101.6	29	8	22
	80	3	210	168	146	123.8	32	8	22
	100	4	273	216	175	149.2	38	8	25
	125	5	330	266.5	210	181	45	8	29
	150	6	356	292	241	211.1	48	12	29
	200	8	419	349	302	270	56	12	32
	250	10	508	432	356	323.9	64	16	35
	300	12	559	489	413	381	67	20	35
	350	14	603	527	457	419.1	70	20	38
	400	16	686	603	508	469.9	77	20	41
	450	18	743	654	574.5	533.4	83	20	44
	500	20	813	724	635	584.2	89	24	44
	600	24	940	838	749	692.2	102	24	52
900Lb	15	1/2	121	82.5	60.5	39.7	22.5	4	23
	20	3/4	130	88.9	66.5	44.5	25.5	4	23
	25	1	149	101.6	71	50.8	29	4	26
	32	1 1/4	159	111.1	81	60.3	29	4	26
	40	1 1/2	178	123.8	92	68.3	32	4	29
	50	2	216	165.1	124	95.3	38.5	8	26
	65	2 1/2	244	190.5	137	108	41.5	8	29
	80	3	241	190.5	156	123.8	38.5	8	26
	100	4	292	234.9	181	149.2	44.5	8	32
	125	5	349	279.4	216	181	51	8	35
	150	6	381	317.5	241	211.1	56	12	32
	200	8	470	393.7	308	269.9	63.5	12	39
	250	10	545	469.9	362	323.9	70	16	39
	300	12	610	533.4	419	381	79.5	20	39
	350	14	640	558.8	467	419.1	86	20	42
	400	16	705	615.9	524	469.9	89	20	45
	450	18	785	685.8	594	533.4	102	20	51
	500	20	855	749.3	648	584.2	108	20	54
	600	24	1040	901.7	772	692.2	140	20	67

法兰连接尺寸 Connection dimension ANSI B16.5a (RTJ)

公称压力 Nominal pressure PN(MPa)	DN		尺寸 Dimensions (mm)						
	mm	in	D	D_1	D_2	D_6	b	螺栓数量(Z) Quantity of the bolt	螺栓孔径(Φ) Aperture of the bolt
1500Lb	15	1/2	121	82.5	60.5	39.7	22.5	4	23
	20	3/4	130	88.9	66.5	44.5	25.5	4	23
	25	1	149	101.6	71	50.8	29	4	26
	32	1 1/4	159	111.1	81	60.3	29	4	26
	40	1 1/2	178	123.8	92	68.3	32	4	29
	50	2	216	165.1	124	95.3	38.5	8	26
	65	2 1/2	244	190.5	137	108	41.5	8	29
	80	3	267	203.2	168	136.5	48	8	32
	100	4	311	241.3	193.5	161.9	54	8	35
	125	5	375	292.1	229	193.7	73.5	8	42
	150	6	394	317.5	251	211.1	83	12	39
	200	8	483	393.7	317.5	269.9	92.9	12	45
	250	10	585	482.6	371	234.9	108	12	51
	300	12	675	571.5	438	381	124	16	54
	350	14	750	635	489	419.1	133.5	16	61
	400	16	825	704.8	546	469.9	146.5	16	67
	450	18	915	774.7	613	533.4	162	16	74
	500	20	985	831.8	673	584.2	178	16	80
	600	24	1170	990.6	794	692.2	203.5	16	93
2500Lb	15	1/2	133	88.9	65	42.9	30.5	4	23
	20	3/4	140	95.2	73	50.8	32	4	23
	25	1	159	107.9	82.5	60.3	35	4	26
	32	1 1/4	184	130.2	102	72.2	38.5	4	29
	40	1 1/2	203	146	114	82.6	44.5	4	32
	50	2	235	171.4	133	101.6	51	8	29
	65	2 1/2	267	196.8	149	111.1	57.5	8	32
	80	3	305	228.6	168	127	67	8	35
	100	4	356	273	203	157.2	76.5	8	42
	125	5	419	323.8	241	190.5	92.5	8	48
	150	6	483	368.3	279	228.6	108	8	54
	200	8	550	438.1	340	279.4	127	12	54
	250	10	675	539.7	425	342.9	165.5	12	67
	300	12	760	619.1	495	406.4	184.5	12	74

对接焊端 Butt-welding ends ANSI B16.25

公称管径 Nominal pipe Size	管 号 Schedule number or wall	焊端外径 Outside diameter		公称内径 Nominal inside diameter		机加内径 Machined inside diameter		管子壁厚 Nominal wall thickness	
		inch	mm	inch	mm	inch	mm	inch	mm
2 1/2	40	2.88	73.0	2.469	62.6	2.479	62.97	0.203	5.2
	80			2.323	59.0	2.351	59.72	0.276	7.0
	160			2.125	54.0	2.178	55.32	0.375	9.5
	XXS			1.771	45.0	1.868	47.45	0.552	14.0
3	40	3.50	88.9	3.068	77.9	3.081	78.26	0.216	5.5
	80			2.900	73.7	2.934	74.52	0.300	7.6
	160			2.624	66.7	2.692	68.38	0.438	11.1
	XXS			2.300	58.5	2.409	61.19	0.600	15.2
3 1/2	40	4.00	101.6	3.548	90.2	3.564	90.53	0.226	5.7
	80			3.364	85.4	3.402	86.41	0.318	8.1
4	40	4.50	114.3	4.026	102.3	4.044	102.72	0.237	6.0
	80			3.826	97.1	3.869	98.27	0.337	8.6
	120			3.624	92.1	3.692	93.78	0.438	11.1
	160			3.438	87.3	3.530	89.66	0.531	13.5
	XXS			3.152	80.1	3.279	83.29	0.674	17.1
5	40	5.56	141.3	5.047	128.1	5.070	128.78	0.258	6.6
	80			4.813	122.3	4.866	123.60	0.375	9.5
	120			4.563	115.9	4.647	118.03	0.500	12.7
	160			4.313	109.5	4.428	112.47	0.625	15.9
	XXS			4.063	103.3	4.209	106.91	0.750	19.0
6	40	6.62	168.3	6.065	154.1	6.094	154.79	0.280	7.1
	80			5.761	146.3	5.828	148.03	0.432	11.0
	120			5.501	139.7	5.600	142.24	0.562	14.3
	160			5.187	131.7	5.326	135.28	0.719	18.3
	XXS			4.897	124.5	5.072	128.83	0.864	21.9
8	40	8.62	219.1	7.981	202.7	8.020	203.71	0.322	8.2
	60			7.813	198.5	7.873	199.97	0.406	10.3
	80			7.625	193.7	7.709	195.81	0.500	12.7
	100			7.437	188.9	7.544	191.62	0.594	15.1
	120			7.187	182.5	7.326	186.08	0.719	18.3
	140			7.001	177.9	7.163	181.94	0.812	20.6
	XXS			6.875	174.7	7.053	179.15	0.875	22.2
	160			6.813	173.1	6.998	177.75	0.906	23.0

对接焊端 Butt-welding ends ANSI B16.25

公称管径 Nominal pipe Size	管 号 Schedule number or wall	焊端外径 Outside diameter		公称内径 Nominal inside diameter		机加内径 Machined inside diameter		管子壁厚 Nominal wall thickness	
		inch	mm	inch	mm	inch	mm	inch	mm
10	40	10.75	273	10.020	254.4	10.070	255.78	0.365	9.3
	60			9.750	247.6	9.834	249.78	0.500	12.7
	80			9.562	242.8	9.670	245.62	0.594	15.1
	100			9.312	236.4	9.451	240.06	0.719	18.3
	120			9.062	230.2	9.232	234.49	0.844	21.4
	140			8.750	222.2	8.959	227.56	1.000	25.4
	160			8.500	215.8	8.740	222.00	1.125	28.6
12	STD	12.75	323.8	12.000	304.8	12.053	306.15	0.375	9.5
	40			11.938	303.2	11.999	304.77	0.406	10.3
	XS			11.750	298.4	11.834	300.58	0.500	12.7
	60			11.626	295.2	11.725	297.82	0.562	14.3
	80			11.374	288.8	11.505	292.23	0.688	17.5
	100			11.062	281.0	11.232	285.29	0.844	21.4
	120			10.750	273.0	10.959	278.36	1.000	25.4
	140			10.500	266.6	10.740	272.80	1.125	28.6
	160			10.126	257.2	10.413	264.49	1.312	33.3
14	STD	14.00	355.6	13.250	336.6	13.303	337.90	0.375	9.5
	40			13.124	333.4	13.192	335.08	0.438	11.1
	XS			13.000	330.2	13.084	332.33	0.500	12.7
	60			12.812	325.4	12.920	328.17	0.594	15.1
	80			12.500	317.6	12.646	321.21	0.750	19.0
	100			12.124	308.0	12.318	312.88	0.938	23.8
	120			11.812	300.0	12.044	305.92	1.094	27.8
	140			11.500	292.0	11.771	298.98	1.250	31.8
	160			11.188	284.2	11.498	292.05	1.406	35.7
16	STD	16.00	406.4	15.250	387.4	15.303	388.70	0.375	9.5
	40			15.000	381.0	15.084	383.13	0.500	12.7
	60			14.688	373.0	14.811	376.20	0.656	16.7
	80			14.312	393.6	14.482	367.84	0.844	21.4
	100			13.938	354.0	14.155	359.54	1.031	26.2
	120			13.562	344.4	13.826	351.18	1.219	31.0
	140			13.124	333.4	13.442	341.43	1.438	36.5
	160			12.812	325.4	13.170	334.52	1.594	40.5

对接焊端 Butt-welding ends ANSI B16.25

公称管径 Nominal pipe Size	管 号 Schedule number or wall	焊端外径 Outside diameter		公称内径 Nominal inside diameter		机加内径 Machined inside diameter		管子壁厚 Nominal wall thickness	
		inch	mm	inch	mm	inch	mm	inch	mm
18	STD	18.00	457.2	17.250	438.2	17.303	439.50	0.375	9.5
	XS			17.000	431.8	17.084	433.93	0.500	12.7
	40			16.876	428.6	16.975	431.17	0.562	14.3
	60			16.500	419.2	16.646	422.81	0.750	19.0
	80			16.124	409.6	16.318	414.48	0.938	23.8
	100			15.688	398.4	15.936	404.77	1.156	29.4
	120			15.250	387.4	15.553	395.05	1.375	34.9
	140			14.876	377.8	15.225	386.72	1.562	39.7
	160			14.438	366.8	14.842	376.99	1.781	45.2
20	STD	20.00	208.0	19.250	489.0	19.303	490.30	0.375	9.5
	XS			19.000	482.6	19.084	484.73	0.500	12.7
	40			18.812	477.8	18.920	480.57	0.594	15.1
	60			18.376	466.8	18.538	470.87	0.812	20.6
	80			17.938	455.6	18.155	461.14	1.031	26.2
	100			17.438	443.0	17.717	450.01	1.281	32.5
	120			17.000	431.8	17.334	440.28	1.500	38.1
	140			16.500	419.2	16.896	429.16	1.750	44.4
	160			16.062	408.0	16.513	419.43	1.969	50.0
22	STD	22.00	558.8	21.250	539.8	21.303	541.10	0.375	9.5
	XS			21.000	533.4	21.084	535.53	0.500	12.7
	60			20.250	514.4	20.428	518.87	0.875	22.2
	80			19.750	501.6	19.990	507.75	1.125	28.6
	100			19.250	488.8	19.553	496.65	1.375	35.0
	120			18.750	476.2	19.115	485.52	1.625	41.3
	140			18.250	463.6	18.678	474.42	1.875	47.6
	160			17.750	450.8	18.240	463.30	2.125	54.0
24	STD	24.00	609.6	23.250	590.6	23.303	591.90	0.375	9.5
	XS			23.000	584.2	23.084	586.33	0.500	12.7
	30			22.876	581.0	22.975	583.57	0.562	14.3
	40			22.624	574.6	22.755	577.98	0.688	17.5
	60			22.062	560.4	22.263	565.48	0.969	24.6
	80			21.562	547.6	21.826	554.38	1.219	31.0
	100			20.938	531.8	21.280	540.51	1.531	38.9
	120			20.376	517.6	20.788	528.02	1.812	46.0
	140			19.876	504.8	20.350	516.89	2.062	52.4
	160			19.312	490.6	19.857	504.37	2.344	59.5

锥管螺纹 National taper pipe thread

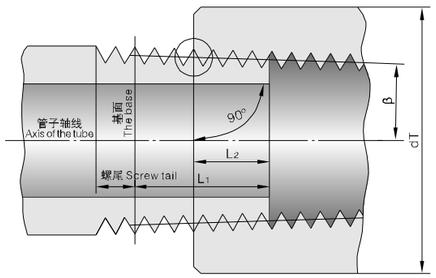

h_0=0.866t
h_2=0.8t
β=1°47'24"
锥度2tgβ=1:16
Gradient2tgβ=1:16

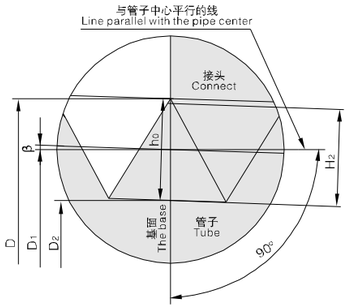

公称直径 Nominal size		每英寸牙数 Threads per inch	螺 距 Pitch of thread	螺纹长度 Thread length		基面上的螺纹直径 DIA.at Referemce surface			管端螺纹内径 Boot DIA.of the pipe thread	工作高度 Height
in	mm	n	p	L_1	L_2	d	d_1	d_2	d_T	h_1
3/8	10	19	1.337	10.5	6.096	17.055	15.926	14.797	14.416	1.129
1/2	15	14	1.814	13.5	8.128	21.223	19.772	18.321	17.813	1.451
3/4	20	14	1.814	14	8.611	26.568	25.117	23.666	23.128	1.451
1	25	11	2.309	17.5	10.160	33.228	31.461	29.694	29.059	1.767
1 1/4	32	11	2.309	18	10.668	41.985	40.218	38.451	37.784	1.767
1 1/2	40	11	2.309	18.5	10.668	48.054	46.287	44.520	43.853	1.767
2	50	11	2.309	19	11.074	60.092	58.325	56.558	55.866	1.767

承插焊端 Socket welded ends

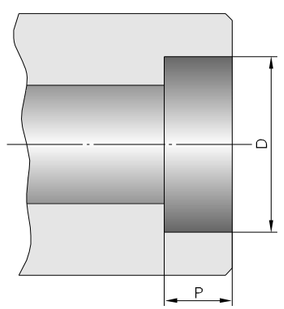

公称直径 Nominal size	in	3/8	1/2	3/4	1	1 1/4	1 1/2	2
	mm	10	15	20	25	32	40	50
D	mm	17.53	21.72	27.05	33.78	42.54	48.64	61.11
Pmin	mm	9.6	9.6	12.7	12.7	12.7	12.7	15.8